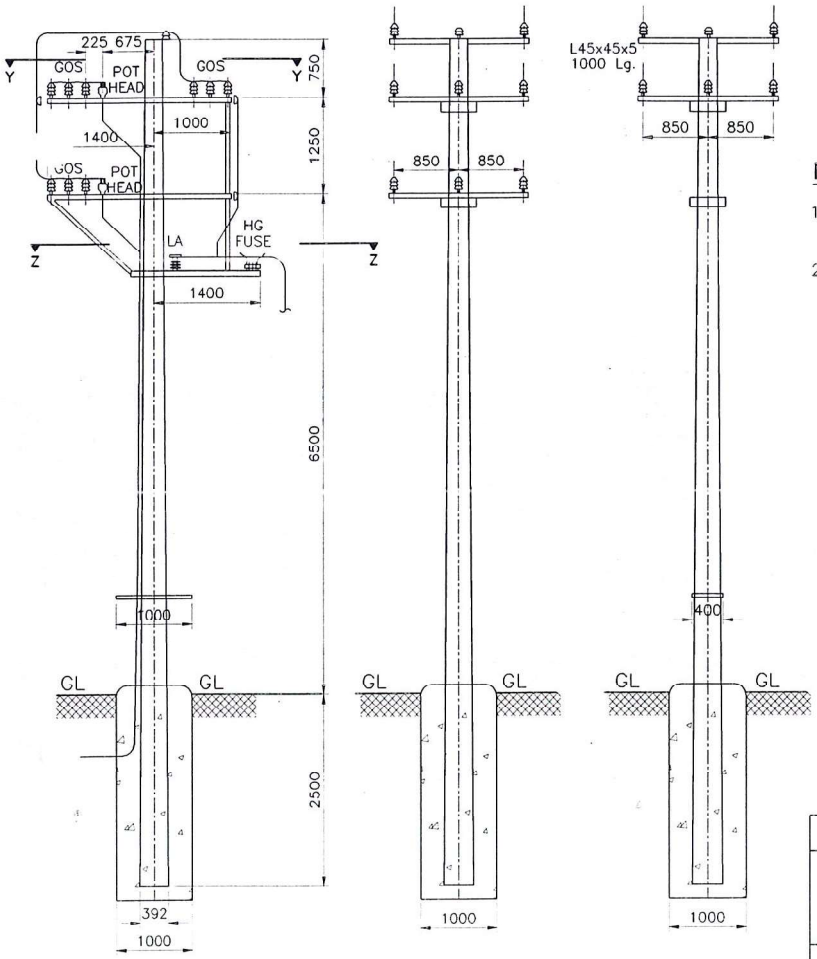

NOTES:-

1. DETAILS OF MOUNTING OF GOS, L.A., H.G.FUSE AND TRANSFORMER ARE SHOWN IN SHEET–2.
2. ALL HOLES ARE 18mm ø FOR 16mm ø BOLTS

	Signatures	All dimensions are in mm unless otherwise stated.	BESCOM
Chd	ASM (QS&S)	3 GOS SYSTEM WITHOUT TRANSFORMER SEATING ANGLE ON 11M LONG TUBULAR SPUN CONCRETE POLE FOR 63/100/250 KVA TRS, BOM-12	Approved: General Manager,(Elec.) QS&S
Sub	DGM (QS&S)		DRG.NO.BESCOM/GM/QS&S/60 REV–002 DATED:24–11–2018
	SCALE N.T.S	SHEET 1 OF 3	

106

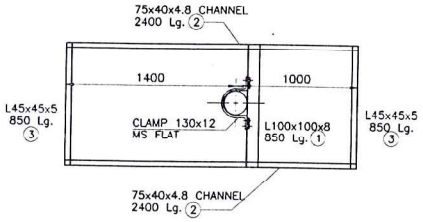

SECTION-Y-Y

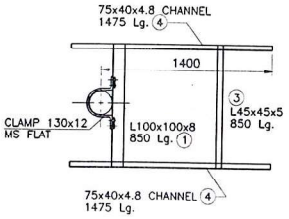

SECTION-Z-Z

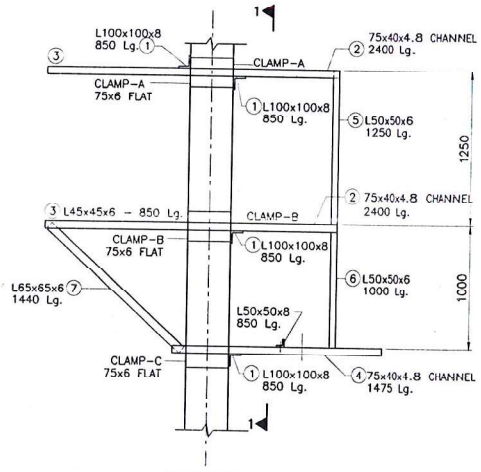

SIDE VIEW

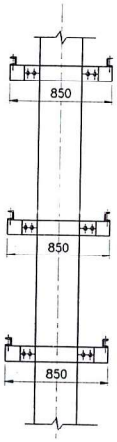

SECTION-1-1

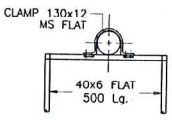

SECTION-X-X

	Signatures	All dimensions are in mm unless otherwise stated.	BESCOM
Chd	AGM (QS&S)	3 GOS SYSTEM WITHOUT TRANSFORMER SEATING ANGLE ON 11M LONG TUBULAR SPUN CONCRETE POLE FOR 63/100/250 KVA TRS, BOM-12	Approved: General Manager,(Elec.) QS&S
Sub	DGM (QS&S)		DRG.NO.BESCOM/GM/QS&S/69 REV-002 DATED:24-11-2018
	SCALE: N.T.S	SHEET 2 OF 3	

107

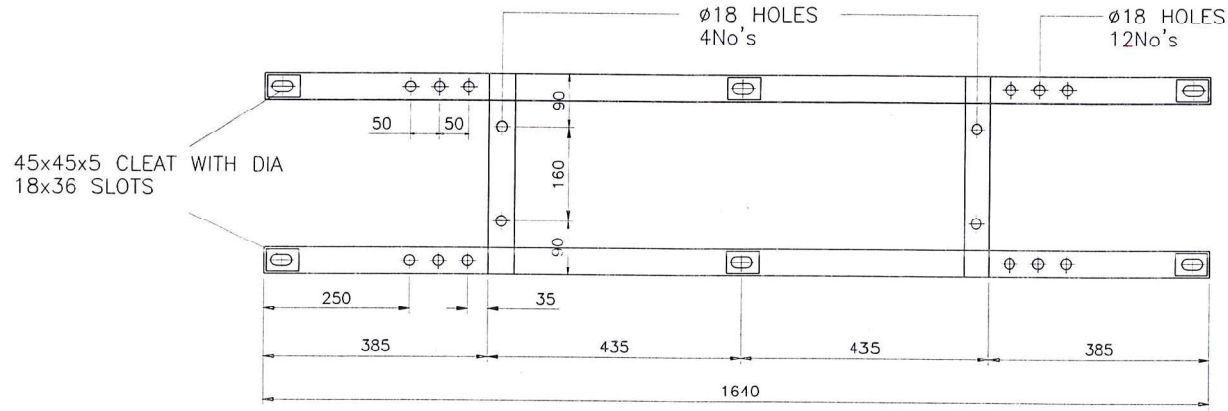

8 H-FRAME

BILL OF MATERIALS – 12

SPMT For UG Cable network (Having 3 Nos H Frame without Transformer seating and seating angle support x-arm) for 11 mtr Spun Pole for 63/100/250/500 KVA Transformer.

Sl No	Size of the steel section	Length (in mm)	Qty (in Nos)	Kgs/Mtr	Total Wt
	TOP Bracket				
1	∠100x8mm MS Angle	850	5	12.1	51.43
2	0x4.8mm MS Channel (MC75/MCP75)	2400	4	7.14	68.54
3	45x45x5mm MS Angle	850	5	3.4	14.45
4	75x40x4.8mm MS Channel (MC75/MCP75)	1475	2	7.14	21.06
5	50x50x6mm MS Angle	1250	2	4.5	11.25
6	50x50x6mm MS Angle	1000	2	4.5	9.00
7	65x65x6mm MS Angle	1440	2	5.8	16.70
	GOS Mounting Structure (Ladder)				0.00
8	45x45x5mm MS Angle	1610	6	3.4	33.46
9	45x45x5mm MS Angle (Cleat)	60	18	3.4	3.67
10	40x40x3mm MS Angle	335	6	3	6.03
11	Round clamps of different sizes made out of MS flats suitable for fixing the above structural materials to the pole				
	a) 75x6 MS Flat	1000	8	3.53	28.24
12	MS Hexagonal bolts, nuts Full Thread and washers of different sizes to sufficient in quantity for fixing		10kgs Approx		10
				Total in Kgs	273.83

	Signatures	All dimensions are in mm unless otherwise stated.	BESCOM
Chd	AGM (QS&S)	3 GOS SYSTEM WITHOUT TRANSFORMER SEATING ANGLE ON 11M LONG TUBULAR SPUN CONCRETE POLE FOR 63/100/250 KVA TRS, BOM-12	Approved: General Manager,(Elec.) QS&S
Sub	DGM (QS&S)	SHEET 3 OF 3	DRG.NO.BESCOM/GM/QS&S/69 REV–002 DATED:24–11–2018
	SCALE: N.T.S		

108

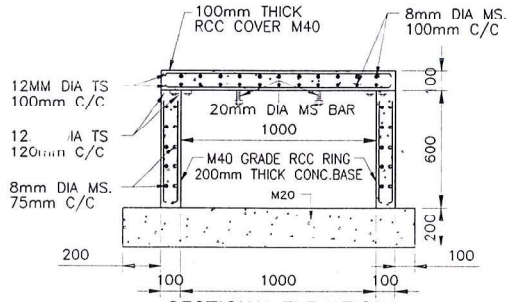

SECTIONAL ELEVATION

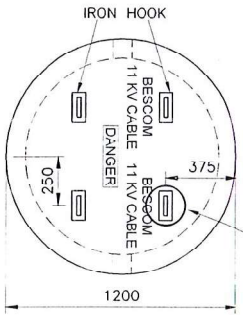

RCC COVER DETAIL

SPECIFICATION:-

1. CONCRETE MIXER :- M40 GRADE, WITH STEEL ROD OF 12mm AT A SPACE OF 1 INCH.
2. LOAD WITH STANDABILITY :- MINIMUM 20 TONNE.
3 CHAMBER HAS TO PLACED ON THE PCC FOUNDATION OF M-20 GRADE OF MINIMUM THICKNESS OF 200mm.

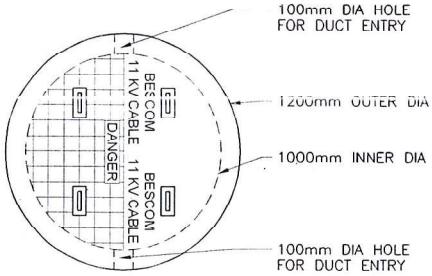

PLAN

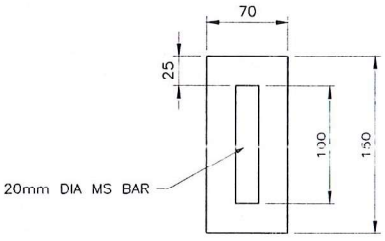

DETAIL -A

	Signatures	All dimensions are in mm unless otherwise stated.	BESCOM
Chd	AGM (QS&S)	DETAILS OF CHAMBER / MANHOLE ARRANGEMENT FOR LAYING OF OPTICAL FIBER CABLE	Approved: General Manager,(Elec.) QS&S
Sub	DGM (QS&S)		DRG.NO.BESCOM/GM/QS&S/78 REV-002 DATED:24-11-2018
	SCALE: N.T.S		

109

PLACED IN THE CONCRETE BLOCK

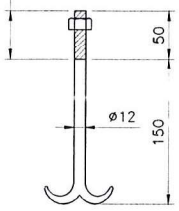

ROUTE MARKER (HT)

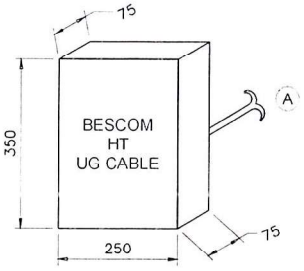

JOINT MARKER (HT)

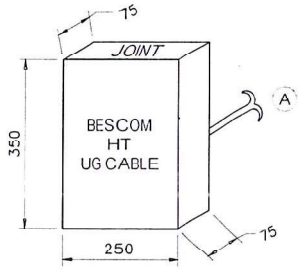

ROUTE MARKER (LT)

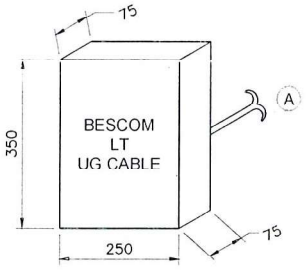

JOINT MARKER (LT)

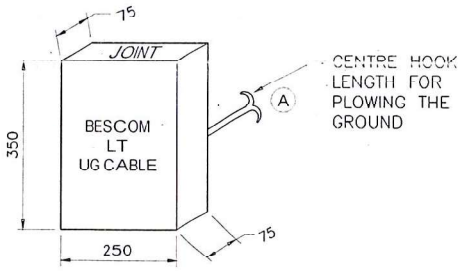

	Signatures	All dimensions are in mm unless otherwise stated.	BESCOM
Chd	AGM (QS&S)	ROUTE MARKER (HT & LT) JOINT MARKER (HT & LT)	Approved: General Manager,(Elec.) QS&S
Sub	DGM (QS&S)		DRG.NO.BESCOM/GM/QS&S/79 REV-002 DATED:24-11-2018
SCALE: N.T.S			

(110)

PLACED IN THE CONCRETE BLOCK

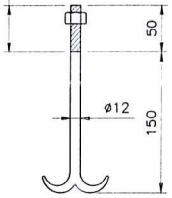

ROUTE MARKER (HT)

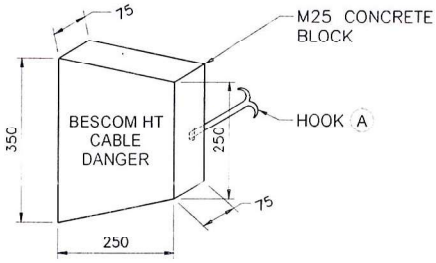

JOINT MARKER (HT)

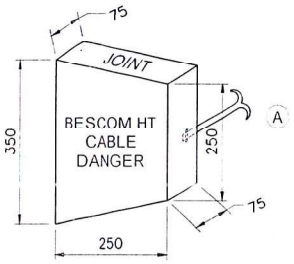

ROUTE MARKER (LT)

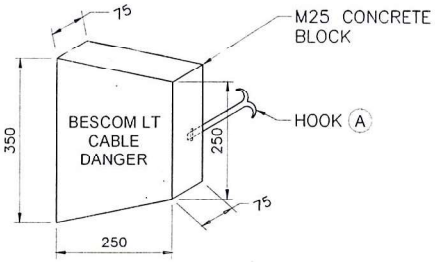

JOINT MARKER (LT)

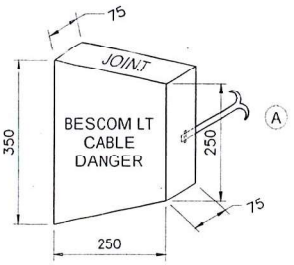

	Signatures	All dimensions are in mm unless otherwise stated.	BESCOM
Chd	AGM (QS&S)	ROUTE MARKER (HT & LT) JOINT MARKER (HT & LT)	Approved: General Manager,(Elec.) QS&S
Sub	DGM (QS&S)		
	SCALE: N.T.S		DRG.NO.BESCOM/GM/QS&S/80 REV-002 DATED:24-11-2018

GUARANTEED TECHNICAL PARTICULARS FOR INDOOR & OUTDOOR TERMINATIONS & STRAIGHT THROUGH JOINTS SUITABLE FOR 11KV (E) SYSTEM

Sl.No.	Particulars	11KV
1	Name of manufacturer	
2	Applicable standards	
3	Rated Voltage of Cable accessories	
4	AC voltage withstand (Dry)	
5	AC voltage withstand (Wet) for out door termination)	
6	DC voltage withstand	
7	Partial Discharge test	
8	Impulse voltage withstand test	
9	Load cycle test	
	a. Each cycle Heating duration	
	Temperature	
	Cooling duration	
	b. Number of cycles	
	c. Continious Phase to earth voltage withstand	
10	Humidity test	
11	Salt Fog test	
12	Thermal withstand short circuit test	
13	Dynamic short circuit withstand test	
14	tubing material	
15	method of stress control	
	method of environmental seal	
16	Non tubing Material	
17	Di electric insulating Material	
18	conductor resistance test	
19	Impact test	
20	Water tightness test	
21	Dielectric power factor test (Applicable for screened cables)	
22	Allowable kit storage temperature	
23	Shelf life of H.S components	
24	Cable termination Instruction manuals	

Guaranteed Technical Particulars

Supply of G.I wire.

1)	N. .e of Manufacturer	
2)	Percentage of Carbon content of the steel wires	
3)	Particulars of Steel Strand	
a)	No. of Strands	
b)	Diameter of each strand mm	
c)	Sectional area of strand Sq.mm	
d)	Min. ultimate tensile strength kg/Sq.mm	
e)	Min. breaking load kg	
f)	Final stress in steel wire	
4)	a) Uniformity of coating duration in and duration of dips n' tes	
	b, .nimum weight of coating gm/sq.mt	
5)	Standard over all dia of ground wire mm	
6)	Area of cross section of ground wire Sq.mm	
7)	Guaranteed ultimate tensile strenght of ground wire kg.	

1)	Name of Manufacturer	
8)	Maximim working tension kg	
9)	Approximate resistance in ohms. Per Km. at 20 deg C ohms/km	
10)	Standard length of GI Wire meters	
11)	Tolerance if any, on standard length	
12)	Modulus of elasticity iof G.I Wire	
13)	Weight of G.I Wire kg/km	
14)	Standard weight of G.I Wire	
15)	Weight of empty druming kg	
16)	Gross weight of the drum	
17)	Dimension of the drum	
18)	Initial and final sags and tension and stringing charts whether furnished	
19)	Standards according to which the ground wire will be manufactured and tested	
20)	Test Certificates whether enclosed or not	
21)	Tolerance of wires Dia	
22)	Lay length of G.I Wire	

Guaranteed Technical Particulars for Guy Wire

Enquiry No.

STRANDED WIRE:

1)	Maker's Name & Address	
2)	Single wire before stranding	
	a) Diameter in mm.	
	b) Tolerance in diameter in mm.	
	c) Minimum elongation in 100 mm ..... in mm	
	d) Minimum breaking load in Kgf.	
3)	Stay-Starnded Wire	
	a) Length of lay in mm.	
	Minimum	
	Maximum	
	b) Minimum breaking load in Kgf.	
4)	Tensile strength of wire in Kgf./mm2	
5)	Overall dia. of stranded wire	
6)	Sectional area of stranded wire in mm2	
7)	Electrical resistance in ohms. Per KM at 20 Deg. C	
8)	Coating test:	
	a) Type of Zinc coating, whether heavy or light	
	b) Weight of coating in gms./mm2	
	c) No. of dips 1 min.	
	1/2 min.	
9)	Tensile test	
	Minimum tensile strength of 100 mm. gauge length of wire	
10)	Ductility Test	
	Condition of wire when wrapped 8 times round its own dia and on being sub-sequently straightened	
11	a) Length of wire in each coil in metres	
	b) Tolerance (%)	
12	a) Weight of each coil	
	b) Tolerance (%)	
	c) Weight of wire in Kg./Km.	
	d) Tolerance (%)	
	Standard according to which staystrand is manufactured and	
13	Details of packing	

Section GTP

SCHEDULE OF GUARANTEED PARTICULARS FOR OUTDOOR RMU
PART 1

01.	Manufacturer's Name and Country of origin	
02.	Manufacturer's Design/Type/Model	
03.	Material used for making the body of the RMU	
04.	Standards of manufacturing	
05.	Whether painting for RMU is done as per standards	
06.	Whether the enclosure is anti-corrosive	
07.	Whether RMU metal clad has sufficient space for integration of: ▪ Minimum 2 numbers of Load Break Switches and 1 to 3 numbers of SF6/Vacuum Circuit breaker ▪ Sufficient space for inspection, testing, etc. ▪ Earthing arrangements ▪ Terminal output points for automation ▪ Sufficient arrangement for future extension with Circuit Breakers	
08.	Maximum withstanding ambient temperature s	
09.	Spacing between live parts to earth	
10.	Whether RMU are designed to withstand all weather conditions including chemical industry and polluted areas	
11.	Period of guarantee of the RMU	
12.	Over all dimensions of the RMU (L x W x H)	
13.	Material & Gauge of material used for fabrication of the RMU	
14.	Whether RMU is manufactured as per IEC/IS standards to hold SF6 gas without leakage	
15.	Whether RMU has provision for sensors for temperature compensated pressure measurement in the relevant gas compartment to monitor the pressure of SF6 gas	
16.	Whether RMU is sealed pressure system	
17.	Weight of RMU complete with operating mechanism	
18.	RMU is provided with necessary take off terminals for automation	
19.	Whether gas chamber is made of stainless steel/metalised cast resin	

SCHEDULE OF GUARANTEED PARTICULARS FOR BREAKER
PART 2

01.	Manufacturer's Name and Country of origin	
02.	Manufacturer's Design / Type ref/Model.	
03.	Material used for making the body of the breaker	
04.	Standards of manufacturing	
05.	Whether the breakers are manufactured as per IEC/IS standards Please give Standards no.	
06.	Maximum temperature withstand of the breakers	
07.	1)Spacing between live part to Earth inside the breaker 2)Spacing between poles	
08.	Period of guarantee of the breaker	
09.	Rated frequency	
10.	Rated voltage	
11.	Highest system voltage	
12.	Rated current	
13.	Short time current rating with duration	
14.	Certificate or report of short circuit type test	
15.	Rated operating duty cycle	
16.	Short circuit breaking current (a)Symmetrical (b)Symmetrical at rated voltage (c)Asymmetrical at rated voltage (i)Per Phase (ii)Average (d)DC Component	
17.	Arcing time (At rated breaking current) in ms.	
18.	Opening time	
19.	Total break time in milli sec. (a)At 10% rated interrupting capacity (b)At rated interrupting capacity	
20.	Breaking Current (a)Rated out of phase current (b)Rated cable charging current (c)Rated fault level MVA (d)Rated capacitor breaking current	
21.	Make time in ms.	
22.	Maximum temperature rise over ambient (a)Main contacts Terminals	

23.	Rated restriking voltage at 100% and 50% rated capacity. (a)Amplitude factor (b)Phase factor (c)Natural frequency (d)R.R.R.V.(Volts/micro sec.)	
24.	Dry 1 minute power frequency withstand test voltage (a)Between line terminal and earth KV RMS (b)Between terminals with breaker contacts open KV RMS.	
25.	1.2/50 full wave impulse withstand test voltage (a)Between line terminal and earth KVp. (b)Between terminals with breaker contacts open KVp.	
26.	SF6 /VCB interrupter make	
27.	Contact separation distance	
28.	Type of main contacts	
29.	Contact pressure	
30.	Contact resistance	
31.	Life of the interrupter (in number of operations) (i)Tripping at rated current (ii)Tripping at maximum fault current. (Allowable maximum erotion 3 mm) (iii)Mechanical operations.	
32.	Details of main contacts making contact with the breaker truck with the panel	
33.	Control circuit voltage AC/DC.	
34.	Whether trip free or not	
35.	Whether all the interlocks provided	

SCHEDULE OF GUARANTEED PARTICULARS FOR LOAD BREAK SWITCHES AND ASSOCIATED ISOLATORS (EARTHING SWITCHERS)
PART 3

Sl.No.	Description	Load Break Switch	Isolator (Earthing Switch)
01.	Manufacturer's Name and Country of origin		
02.	Manufacturer's Design / Type ref/Model.		
03.	Material used for making the body of the isolators .		
04.	Standards of manufacturing		
05.	Whether the isolators & earth positions are manufactured as per IEC/IS standards		
06.	Maximum temperature withstand of the isolators & earth switches		
07.	1)Spacing between live part to Earth 2)Spacing between fixed and moving contacts in the open position.		
08.	Period of guarantee of the isolators		
09.	Rated frequency		
10.	Rated voltage		
11.	Highest system voltage		
12.	Rated current		
13.	Short time current rating with duration		
14.	Certificate or report of short circuit type test		
15.	Rated operating duty cycle		
16.	Short circuit breaking current		
17.	Arcing time (At rated breaking current) in ms.		
18.	Opening time		
19	Whether all the interlocks provided		
20	Whether Sufficient arrangements are made to operate the isolators through DAS.		
21	Fault passage indicator 1)Type/Model 2)Self powered Yes/No 3)Current readings 4)Fault currents 5)Phase currents		

SCHEDULE OF GUARANTEED PARTICULARS FOR CURRENT TRANSFORMERS
PART 4

01.	Manufacturer's Name and country of origin	
02.	Manufacturer's design ref / model	
03.	Applicable Standards	
04.	1)Type of CT 2)Ratio	
05.	Rated Primary current	
06.	Rated secondary current	
07.	Rated frequency	
08.	Transformation ratio	
09.	Number of cores	
10.	Rated output (a) For Core-I	
11.	Class of insulation	
12.	Class of accuracy For Protection	
13.	Short time current rating and its duration	
14.	Secondary resistance at 70 Deg °C	
15.	Continuous over load (percentage)	
16.	One minute power frequency dry withstand voltage	
17.	1.2/50 micro sec. impulse withstand test voltage	
18.	One minute power frequency withstand test voltage on secondary	
19.	Instrument safety factor	
20.	Type of primary winding	
21.	Literature/leaflets pamphlets about the current transformer offered	
22.	Period of guarantee	

SHEDULE OF GUARANTEED TECHNICAL PARTICULARS FOR SELF POWERED MICRO-PROCESSOR BASED NUMERICAL RELAYS
PART 5

01.	Manufacturer's Name and Country of origin		
02.	Manufacturer's design / Ref. Type		
03.	Applicable Standards		
04.	Current Setting range for (a) Over current relay (b) Earth fault Element	IDMT Definite Time	
05.	Whether the relay has the in-built facilities of IDMT, OL, EL		
06.	Details of IDMT Characteristics		
07.	Accuracy for different settings and limits of errors		
08.	Whether Alpha numeric / LED display		
09.	Whether compatible for 1 A CT Secondary		
10.	Whether draw out type		
11.	Types of case		
12.	Reset time		
13.	Burden of relay		
14.	Maximum and Minimum, operating ambient air temp.		
15.	Whether technical literature pamphlets about the relay offered.		
16.	Period of guarantee.		
17.	Certificate of Proof for Electro Magnetic Interference.		
18	Communications port – RS 232		
19	Communication Protocol – MODBUS		

NOTE:- Any other information intimated later to be furnished as per applicable IS.

BANGALORE ELECTRICITY SUPPLY COMPANY LIMITED		
GUARANTEED TECHNICAL PARTICULARS		
	Name of the bidder	
Sl. No	**Particulars**	**Particulars to be furnished by the bidder**
		..... Sq.mm lead wire
1	Size of Cable	
2	Nominal area of cross section in Square mm	
3	Number of strands and dia of each strand	
4	Voltage class	
5	Radial thickness of insulation in mm	
6	Nominal overall diameter of cable in mm	
7	Name of manufacture (Brand Name)	
8	Colour of Cable	
9	Maximum resistance of the conductor per KM at 20 Deg C.	
10	Length of cable per coil	
11	Estimated conditional rating in amps corresponding to the temperature of 80 Deg C.	
12	Weight of Aluminium/ coil of 100 Mtrs.	
13	Total weight of the Cable / Coil of 100 mtrs.	
14	Purity of Aluminium rods.	

Technical specification for PLB HDPE TELECOM DUCT

(as per TEC GR No: TEC/GR/TX/CDS-008)

1.0 GENERAL:

1.1 Scope: This document covers the requirement of permanently lubricated High Density Polyethylene ducts (PLB HDPE ducts) for use as underground cable conducts for optical fiber cables, suitable for cable installation by blowing/pulling technique, suitable for installation by HDD method.

2.0 PRODUCT DESCRIPTION:

2.1 The PLB HDPE duct shall consist of two concentric layers, the outer layer being, HDPE; co-extruded with an inner layer of solid permanently lubricant and 32nos. of straight spiral ribs to reduce the Internal Co-efficient of Friction (ICF). The lubricant shall be of solid layer of uniform thickness so formulated to provide a permanent, low friction boundary layer between the inner surface of the duct and OF cable. The lubricant layer shall be clearly visible in cross- section, concentric with the outer layer.

2.2 The PLB HDPE duct shall be supplied in a continuous length in coil form, suitable for shopping and handling purposes.

3.0 MATERIAL:

3.1 Two Layer construction:

3.1.1 Outer Layer: The base HDPE resin used for the outer layer of the PLB HDPE duct shall conform to any designation of IS:7328 or to any equivalent standard meeting the following requirements, However ,the manufactures shall furnish the designation for HDPE resin as per IS:7328, as applicable.

3.1.2 Inner Layer: The inner lubrication material shall be of friction reducing, polymeric material with 32nos of straight spiral ribs which shall be integral with HDPE layer. The lubricant materials shall have no toxic or dermatic hazards for safe handling. In the finished PLB HDPE duct, the co-extruded inner layer of solid permanent lubricant shall be integral part with HDPE and shall be white in colour and clearly visible in cross section of duct. The density of inner layer material shall be between 0.940 and 0.958g/cc at 27 Degree C.

3.1.3 The inner layer of solid permanent lubricant shall be continuous all through and shall not come out during storage, usage and throughout the life of the duct.

3.2 The raw material (s) used for the duct shall meet the following requirements:

a) The anti – oxidant used shall be physiologically harmless
b) None of the additives shall be used separately or together in quantities as to impair long term physical and chemical properties of the duct.
c) Single pass rework material of the same composition produced from the manufacture's own production shall be used and it shall not exceed 10% in any case.

d) The raw material used for extrusion shall be dried to bring the moisture content to less than 0.1%.
e) Suitable UV stabiliser shall be used for manufacture of the duct to protect against UV degradation, when stored in open for a minimum period of 8 months.
f) The raw material used in the manufacture of the duct shall be such that the service life of the duct and all its accessories can be expected to be more than 50years including the life of permanent lubricant.
g) The ash content of the colour master batch shall not be more than 12% when tested as per method detailed below.Test Method for ash content: About one gram of the sample under test shall be taken and dried at 105C for two hours in a platinum or glazed porcelain or silica or quartz crucible. The weight of the sample transferred to a muffle furnace maintained at 600+ 50C and allowed to remain there for three hours. The ash content may be calculated as a percentage of the weight of the original sample.

3.3 Source Approval: The HDPE resin raw material used in the manufacture of ducts shall have source approval of CACT/Accredited laboratory. The source approval for the HDPE resin raw material will be granted by CACT / Accredited laboratory if the material conforms to clause 3.1.1 HDPE resin to be sourced from Indian Resin manufacturer's like GAIL, IOCL & Reliance only. No regrind shall be used.

a)	Density	0.940 to 0.958 g/cc at 27degree C, when tested as per IS : 2530 or IS 7328
b)	Melt Flow Rate (MFR)	0.2 to1.1g/10 minutes at 190 degree C & 5 kg load, when tested as per IS:2530
c)	Tensile Strength at Yield	20N/mm2 minimum. when tested as per ASTM D638,Type – IV specimens
d)	Elongation at break	>600% when tested as per ASTM D638, Type IV specimens
e)	Flexural Modules at 1% strain	693N/mm2 minimum, when tested as per ASTM D2240
f)	Hardness , Shore – D	Between 60 and 65 units, when tested as per ASTM D2240
g)	Heat Defection temperature at 45g/mm2	65degree C minimum, when tested as per ASTM D648.
h)	Environmental Stress crack resistance, when tested with 10% Igepal, CO 0630 Solution at 50 degree C	96hrs, when tested as per ASTM D1693, No cracks
i)	Weathering in artificial (UV) light (Specimens shall be as per ASTM D638 type – IV) and cut from compression moulded sheet.	After exposure for 720hrs, Tensile strength shall be tested. The variation shall not be greater than 20% compared to tensile strength obtained at c) above . For details of cycle time etc, refer clause 4.22
j)	OIT (in aluminium Pan)	30minutes minimum, when tested as per Annexure -1 of this GR.
k)	UV Stabliser Content	Hindered Amine Light Stabliser minimum 0.15%, when analyased as per FT-IR method (external agency report conforming to the requirement shall be submitted by vendor)

4.0 **COMPLETED PLB HDPE DUCT REQUIREMENTS:**

4.1 Visual Inspection: the ducts shall be checked visually for ensuring good workmanship. The ducts shall be free from blisters, shrink holes, flaking , chips, scratches, roughness, break and other defects. The ducts shall be smooth, clean and round. the end shall be clearly cut and shall be square with axs of the duct.

4.2 Colour of the Duct: The ducts shall be made in eight colours viz. Green , Orange, Blue, Yellow, Brown, Violet, Grey and red. The colour of the duct shall be uniform through out. Each duct shall contain four approximately equispaced, continuous, longitudinal stripes of width 3mm,minimum , in white colour. These shall be same as that of base compound of the duct. The purchasing authority shall specify the colours of the duct ordered for".

4.2.1 The inner layer shall be white in colour.

4.2.2 The colours of the duct, stripe and inner layer shall be identifiable under normal lightning conditions, and generally conform to IS.9938.

4.3 Dimensions of ducts: The nominal size of the ducts shall be 40/33 mm & 50/42mm and shall meet the following requirements.

	40mm/33mm	**50mm/42mm**
a) Outside diameter	40mm+0.4mm-0.0mm	50mm+0.5mm-0.0mm
b) Wall thickness	3.5mm+0.2mm	400+0.3mm
c) Thickness of the inner layer	Minimum 0.28mm Maximum 0.42mm	Minimum 0.32mm Maximum 0.48mm
d)Standard length	1000+100 Meters	1000+100 Meters
d) Maximum outer diameter of cable that can be installed by blowing technique	48F & 96F	288F

Note: Selection of duct size will depend on the outside diameter of the O.F. cable to be installed

4.4 Tensile strength and Elongation: The sample taken from the PLB HDLPE ducts when tested as per ASTM F 2160 (using type IV specimens of ASTM D 638) shall meet the following requirements:
Tensile Strength at yield --- Min. 20 N/mm2 (When tested at a machine speed of 50 mm /min)
Elongation – Min 500% - (When tested at a machine speed of 50 mm /min)

4.5 Reversion Test: : This test shall be carried out as per IS 4984. For this purpose, a duct length of 200 mm shall be placed horizontally in an air-oven or a suitable liquid bath on a support at 110 ± 2 deg C for 60 minutes so that the dimensional changes in duct section are not impeded. After cooling at room temperature, the dimensional change of the duct section shall be measured in the longitudinal direction and deviation from the initial length shall be calculated and stated in percentage. The dimensions shall not change by more than 3% in the longitudinal direction

4.6 Environmental stress Crack resistance: : The specimen cut from the PLB HDPE ducts shall meet the environmental stress cracking as described in ASTM D – 1693, when tested with 10% Igepal (CO 630) solution at 50 ± 1 deg C for 96 hours. There shall be no failure

4.7 Impact Strength: The test has to be carried as per IS: 12235 (Part-9). A sample duct 150 mm in length shall be placed on a heavy rigid block whose faces are at an angle 120 deg. A striker with a hemispherical nose of 13 mm radius and loaded to a total weight of 10Kg shall be allowed to fall

freely in a suitable vertical guides through a height of 1.5 m before striking the duct. The line of fall of the striker shall coincide with the diameter of the duct. The duct shall not crack or split

4.8 Crush Resistance: Samples of duct of 150 mm ± 2 mm in length shall be subjected to a dead load of not less than 50 kg for one minute and shall be allowed to recover for 5 minutes. The deflection with load on and after recovery period shall not exceed 10% and 2% respectively

4.9 Mandrel Test: A 150 mm long mandrel of diameter, 3 mm less than the internal diameter of the duct shall be passed through a 5 meter length of duct, freely throughout the length, when the duct is bent to a radius of 5 meters

4.10 Ovality Test: : Ovality is the difference between maximum outside diameter and the minimum outside diameter at the same cross section of the duct, at 300 mm away from the end. The ovality for 50/42 mm & 40/33 mm shall not exceed 1.4 mm and the ovality for 32/26 mm duct shall not exceed 1.3 mm, when measured as per IS : 4984.

4.11 Coil Test: : The PLB HDPE duct shall unroll off the drums without snaking or waving having zero coil set. Thus, the duct shall lay straight into the trench without recoiling. For this purpose, when a minimum length of 50 meters duct taken from the coil and laid on the ground, it shall be straight without any bends or kinks and without deformation, except 5 meters from each end

4.12 Oxidation Induction Test: The induction time in oxygen when tested as per method in Annexure-I, shall not be less than 30 minutes

4.13 Hydraulic characteristics: : The duct shall be tested for internal pressure creep rupture test IS:4984. For this purpose , a sample length of 10 times the outside diameter of the duct shall be taken. At the end of the test, the sample shall not show signs of the duct shall be taken. At the end of the test, the sample shall not show signs of localized swelling or leakage and shall not burst during the test duration. The test showing failure within distance equivavalent to the length of end cap from end shall be disregarded and the test repeated. The test temperatures and duration of the test shall be as follows:

Test	Test Temp, degree C	Test Duration (Hrs.) (Min holding time)	Induced Stress (Mpa)
Type Test	80	165	3.5
Acceptance Test	80	48	3.8

4.14 Internal Co-efficient of Friction: The internal co-efficient of friction when tested as per the method in Annexure – 2, shall not exceed 0.06, when tested with respect to Nylon jacketed unarmored OF cable, i.e, 288F,96F/48F,24F or 12F depending on the size of the duct. The internal coefficient of friction for additional three cables viz. 576F, 288F and 144F should not exceed 0.06

4.15 Identification Markings: The duct shall be prominently marked with indelible ink, with the following information at intervals every metre to enable identification of the pipe. The size of ink markings shall be distinct, clearly and easily visible.

- Service Provider/Purchaser cable duct
- BESCOM Emblem(Specific to purchaser)
- Manufacturer's name(also can be in abbreviated form)
- Name of the duct with size
- Color of the duct : Blue for 288c fiber & yellow for 96c fiber
- For marking machine number/specific serial no. of the duct and date of manufacture, a composite number as mentioned below would be used

  A composite no. shall be given in the format XYYMMDDSSSS, where –
  X- Machine Number
  YY – Year of manufacture
  MM – Month of manufacture
  DD – Date of manufacture
  SSSS – Serial No. of the duct length manufactured in machine number X
  Along with the above composite number, sequential marking at every metre shall be done for each duct length

4.16 Optical Fibre Cable Blowing test: : As per TEC/GR/TX/CDS-008/03/MAR-11

4.17 Density: The density of the duct shall be between 0.940 and 0.958 gms/cc at 27 deg C and shall not differ from that of the raw material by more that 0.003 gms/cc, when tested as per IS 2530 or IS 7328. The same test method shall be used for determining the density of the raw material as well as the completed duct. The test will be conducted by collecting raw material from the hopper during extrusion and finished duct made from the same material

4.18 Melt Flow Rate (MFR) : The change in the MFR caused by the processing of raw material into duct, i.e the difference between the measured value for the outer layer material from the duct and measured value for the raw material shall not be more that 30%, when tested as per IS 2530. The test will be conducted by collecting raw material from the hopper during extrusion and finished duct made from the same material

4.19 Ash Content: : The ash content of duct shall not be more than 0.3% when tested as per method described in clause 3.2(g)

4.20 Test for fading of colours of duct: : The duct shall be tested for the fading of colours as per ASTM D 1712. There shall be no discoloration

4.21 UV Stabliser Test: The test shall be conducted on specimens taken (as per type IV of ASTM D 638) from the duct. The aging shall be done with UV-B lamps at a typical irradiance of 0.63 W/m2/nm as per cycle no. 2 of ASTM G154

Lamp – UV- B Lamp
Cycle – 4hrs. UV exposure at 60 deg C & 4 hrs. condensation at 50deg C
Total Cycle Time – 720 hrs

Reference – ASTM D 638 (Type IV specimen)

After aging the specimen shall be tested for tensile strength at a speed of 50 mm/minutre. The variation compared to the value obtained before aging as in clause 4.4 shall not be more that 20%

5.0 **PLB HDPE DUCT ACCESSORIES:**

5.1 The following accessories are required for jointing the ducts and shall be supplied along with the ducts. The manufacturers shall provide complete design details, procedure for the method of installation and type/grade of the material used for the accessories. The required quantity shall be indicated by the purchasing authority in the purchase order

a) Plastic Coupler (Push-Fit Type) – It is used to couple two ducts. The design of this shall be simple, easy to install and shall provide air tight and water tight joint between the two ducts. The coupler shall ensure that the two ducts are butted smoothly without any step formation in the inner surface. The jointing shall meet the air pressure test 15 kg/cm2 for a minimum period of 2 hours without any leakage. The material of the coupler shall be as per clause 3.1.1 of the GR

Push Fit couplers meeting the above requirements may be used

Manufacturer shall furnish the complete engineering drawings of the various components used & material specifications. This will be recorder for that manufacturer for future verification. Installation instructions also shall be provided by the manufacturer. Note – Both sides of the coupler shall be marked with the manufacturers name by engraving and that the ends of the duct shall be covered with removable caps to prevent the entry of foreign matter while not in use.

b) End Plug – This is for sealing the ends of the empty ducts, prior installation of the OF cables and shall be fitted immediately after laying of the duct, to prevent the entry of any dirt, water, moisture, insects/rodents etc.

c) Cable Sealing Plug – This is used to seal the ends of the ducts perfectly, after the cable is installed in the duct, to prevent the entry of dirt, water, moisture, insects/rodents etc. This is required at all places where cables has come out of the duct either for jointing or entry into the building as required. The sealing plug shall be capable of accommodating standard sizes of optical fibre cable taking into account the variation in the diameter due to tolerance limits etc.

d) End Cap – This cap, made of hard plastic material, shall be fitted onto both ends of the duct coil after manufacturing the duct. This shall avoid entry of duct, mud and rain water into the duct during transit and storage

5.2 Pulling force required to pull out two pieces of duct joined by coupler: The pulling force required shall be minimum of 450kgf for 50/42mm duct, 320 kgf for 40/33 mm duct and 250 kgf for 32/26 mm duct. The test may be conducted by loading the coupler joined by two pieces of duct for 15 minutes using a dead load

5.3 Ageing Test for Accessories : The accessories , coupler, end plug and cable sealing plug covered in clause 5.1 shall be subjected to an ageing test. In this test the accessory under test shall be installed on a piece or pieces of duct as the case may be. It shall then be tested for tightness as per the GR and it shall pass the test. The accessory thus installed

shall then be aged in an air circulating oven at 70 ± 2 deg C for 168 hours. At the end of the period, it shall be allowed to cool to room temperature and then be tested for tightness as per the GR and it shall pass the test

5.4 The following additional tools are required for jointing of the ducts and installation of optical fibre cable. These item can be procured as per the manufacturer specifications as and when required by the purchasing authority

a) Rotary Duct Cutter – This is required to cut the duct ends squarely without any burr or notch

b) C Spanner – This is required to tighten plastic coupler properly so s to ensure air/water tightness as specified above, in case of compression type coupler

c) Chamfering Tool – This is required to give slight chamfer to the ends of PLB ducts, to facilitate installation of coupler for jointing purpose

d) Blowing Equipment – The equipment used for installing optical fibre cable by blowing technology shall be capable of pushing 1 km cable into the duct with powerful air stream generated by a compressor. The compressor shall have following characteristcis:
Pressure – Min 8 Bar & Max 12 bar
Flow Rate – 10m3/minute
The mechanical feeder of the equipment shall not cause any damage to the sheath/jacket of the optical fibre cable

Note – It shall also be possible to pull the OF cable manually over shorter section (up to 200 meter) which will be described in the engineering instruction

6.0 Type Approval/Technical Specification evaluation:

6.1 All the tests mentioned in this document shall be carried on ducts as per the procedure described in the following paragraphs and the samples must pass this tests according the type approval /technical specification evaluation certificate. For according type approval/ technical specification evaluation certificate, the manufacturer shall furnish the samples as per the sample plan as given in clause No.6.2 and 6.3 below for carrying out these tests. Bulk manufacture and supply shall start only after the issue of type approval/ technical specification evaluation certificate. The type approval certificate/ technical specification evaluation certificate shall clearly indicate the type/ grade/source of high density poly ethylene raw material, the size of the duct and construction of the duct i.e 2 layers.

6.2 When single color, single size duct is offered, the following sampling plan are to be followed.

Sampling Plan	UV ageing test to be done on	Blowing test to be done on	All other tests to be done on	Remarks
Five ducts each having the standard length to be offered	Only one duct per size per color	Two ducts per size	All the five ducts for one size	Nil

6.3 Sampling Plan etc., multicolor, multi size ducts are offered.

Sampling Plan	UV ageing test to be done on	Blowing test to be done on	All other tests to be done on	Remarks
Minimum two ducts per one color per one size should be offered	For each size and each color one duct should be offered	Two ducts per one size	All the ducts	For all the color and sizes put together the number of ducts should not be less than 5 numbers

7.0 **ACCEPTANCE TEST:**

7.1 The accepted test shall be carried out on sample selected from the lot as per table 1 for dimensional and visual requirements. The requirements for tensile strength and elongation, reversion test ESCR TEST, Impact strength, crush resistance, oxidation induction test, hydraulic characteristics and internal coefficient of friction shall be carried out as per Table.2, In addition to measuring wall thickness and testing of internal coefficient of friction at the ends, these two parameters shall be checked at any point between the ends by cutting the duct at intermediate points. The duct thus cut shall be supplied to the field with an additional coupler.

7.2 The dimensions and breaking load of rope shall be checked when duct is supplied with pre-installed rope.

7.3 The acceptance tests and the sampling plan can be modified by the service provider/purchaser at his discretion at any point of time.

8.0 **STORAGE:** All the material shall be stored in the manufacturer's premises in such a manner that it will not affect the performance of the product

9.0 **PACKING & DELIVERY:** The store shall be supplied in coil of suitable size for delivery in such a manner that they arrive at their destination in a safe and undamaged condition and will permit the loading, unloading and handling the stores using standard moving equipment. The minimum inner bending diameter of the coiled duct shall be 25 times the outer diameter of the duct

10.0 **QUALITY REQUIREMENTS OF THE MANUFACTURING SYSTEM:** The item shall be manufactured from a source complying in accordance with international quality & safety standards i.e. ISO 9001, ISO 14001, ISO 18001 and ISRS audit requirements

11.0 **Packing and condition of delivery:**

The pipe may be supplied in coil forms.

All materials furnished and all work performed shall be inspected and tested. Deliverables shall not be shipped until all required inspections and tests have been completed, and all deficiencies have been corrected to comply with this Specification and approved for shipment by the Employer.

Except where otherwise specified, the Contractor shall furnish all manpower and materials for tests, including testing facilities, power and instrumentation, and replacement of damaged parts. The costs shall be borne by the Contractor and shall be deemed to be included in the contract price.

The entire cost of testing for factory & site acceptance, routine tests, production tests and other test during manufacture & site activities specified herein including the expenses of Inspector/Employer's representative shall be treated as included in the quoted unit price of materials

Acceptance or waiver of tests will not relieve the Contractor from the responsibility to furnish material in accordance with the specifications.

All tests shall be witnessed by the Employer and/or its authorized representative (hereinafter referred to as the Employer) unless the Employer authorizes testing to proceed without witness. The Employer representative shall sign the test form indicating approval of successful tests.

Should any inspections or tests indicate that specific item does not meet Specification requirements, the appropriate items shall be replaced, upgraded, or added by the Contractor as necessary to correct the noted deficiencies at no cost to the Employer. After correction of a deficiency, all necessary retests shall be performed to verify the effectiveness of the corrective action.

The Employer reserves the right to require the Contractor to perform, at the Employer's expense, any other reasonable test(s) at the Contractor's premises, on site, or elsewhere in addition to the specified type. Acceptance, Routine or Manufacturing tests to assure the Employer of specification compliance.

The Employer also reserves the right to require any retesting of previously approved tests at the Employer's expenses. However, if the retest(s) reveal non-compliance to the specification, the Contractor shall bear the expenses for the retesting and remedial action at no cost to the employer.

12.0 **Factory Acceptance Test:**

Factory acceptance tests shall be conducted on randomly selected final assemblies of all equipment to be supplied. Visual inspection shall be carried out on 100% basis for all the equipment/items offered. Factory acceptance testing shall be carried out on HDPE and accessories.

Material shall not be dispatched to the Employer until required factory tests are completed satisfactory all variances are resolved, full test documentation has been delivered to the Employer, and the Employer has issued Material Inspection & Clearance Certificate (MICC). Successful completion of the factory tests and the Employer approval to dispatch shall in no way constitute final acceptance of the system or any portion thereof. These tests shall be carried out in the presence of the Employer's authorized representatives.

Factory acceptance tests shall not proceed without the prior delivery to and approval of all test documentation by the Employer.

The factory acceptance test shall demonstrate the technical characteristics of the equipment in relation to this specifications and approved drawings and documents. The factory acceptance test for items shall be proposed by the Contractor in accordance with technical specifications and Contractor's (including Sub-Contractor's/supplier's) standard FAT testing program. For Test equipment, FAT tests shall include supply of proper calibration certificates, demonstration of satisfactory performance, evidence of correct equipment configuration and manufacturer's final inspection certificate/report.

Sampling for FAT:

From each batch HDPE pipe presented by the Contractor for Factory acceptance testing, the Employer shall select random sample (s). For HDPE pipes, following sampling plans shall be followed.

B. **Sampling plan for Visual inspection and dimensional test**

Scale of sampling for Visual inspection and dimensional test shall be as per below table:

No of Pipes in the Lot	Sample No A	Sample Size	Cumulative Sample Size	Acceptance No	Rejection No
(1)	(2)	(3)	(4)	(5)	(6)
Upto 150	First	13	13	0	2
	Second	13	26	1	2
151 to 280	First	20	20	0	3
	Second	20	40	3	4
281 to 500	First	32	32	1	4
	Second	32	64	4	5
501 to 1200	First	50	50	2	5
	Second	50	100	6	7
1201 to 3500	First	80	80	3	7
	Second	80	160	8	9
3501 to above	First	125	125	5	9
	Second	125	250	12	13

The number of pipes given for the first sample in col 3 of above Table shall be examined for dimensional and visual requirements given in clause 1.8.1 & 1.8.2. A pipe failing to satisfy any of these requirements shall be considered as defective. The lot shall be deemed to have satisfied

these requirements, if the number of detectives found in the first sample are less than or equal to the corresponding acceptance number given in col 5 of above Table. The lot shall be deemed not to have met these requirements if the number of detectives found in the first sample is greater than or equal to the corresponding rejection numbers given in column 6 of above Table.

If, however, the number of detectives found in the first sample lies between the corresponding acceptance and rejection numbers given in col 5 and 6 of above Table, the second sample of the size given in col 3 of above Table shall be taken and examined for these requirements. The lot shall be considered to have satisfied these, requirements, if the number of detectives found in the cumulative sample is less than or equal to the corresponding acceptance number given in col 5 of above Table; otherwise not.

B. **Sampling Plan for performance test**

The lot having satisfied dimensional and visual requirements shall be tested for other requirements with the sample size selected as per below Table from the lot. The lot shall be considered to have met the requirements of these tests, if none of samples tested fails.

No. of pips in the lot	Sample size
Up to 150	3
151 to 1200	5
1201 and 3500	8
3501 and above	12

Since FAT testing provides a measure of assurance that the Quality Control objectives are being met during all phases of production, the Employer reserves the right to require the Contractor to investigate and report on the cause of FAT failures and to suspend further testing/approvals until such a report is made and remedial actions taken, as applicable.

SITE ACCEPTANCE TESTS

Random checks somewhere in the middle of the pipe, by cutting the duct, will be made at site to ensure that ducts supplied are of correct dimension and thickness and there is no compromise on thickness in intermediate length, for saving in materials cost.

100% Duct pipe being supplied would be measured length to cross check the length of the duct pipe

To keep a check on the use of filler material, ash contents would be determined on randomly selected samples as per TEC/GR/TX/CDS-008/03/MAR-11 and the value of ash content, thus determined, shall not exceed 0.3% (outer coloured layer).

UV Stabilise Content: UV Stabiliser content of finished duct shall not be less than 0.15%

Third party inspection on above, in addition to inspection at factory, would be carried out by independent agencies. on randomly picked up samples from field for testing of relevant parameters, thereby ensuring right quality of ducts. Failure of samples to pass any of the

prescribed tests/parameters would result in immediate invoking of PBG/Blacklisting of the Vendor.

OXIDATION INDUCTION TEST

1.0 A short length of completed duct (approximately 30 cm) shall be sealed at the ends and placed in an oven at temperature of 68 ± 1° C for 8 hours. The sample shall then be allowed to cool at room temperature for at least 16 hours. The sample shall be clean and dry. The sample shall then be tested by means of a Differential Scanning Calorimeter (DSC) or by Differential Thermal Analyser (DTA).

2.0 Instrument Test Procedure:

2.1 Cell Cleaning: The cell shall be held at approximately 400° C for 10 minutes in Nitrogen. The cell shall be cleaned after standing over night and between testing of different formulations.

2.2 Temperature Calibration: This has to be done according to the instrument manual. The temperature scale should be adjusted until the determined melting point of pure Indium metal is 156.6° C at a heat rate of 5° C per minute or any other heat rate as indicated in the manual of the equipment is permitted.

2.3 Aluminium Pan Preparation: Standard aluminium DSC pans as per ASTM D 4565 are required to hold specimens during testing..A fresh pan shall be used for each test.

2.4 Sample Preparation: Take the sample weighing about 5 mg from the duct conditioned as indicated above. Position the sample in the center of the pan.

2.5 Nitrogen Purge: Place the sample pan and reference pan in instrument cell. Flush for 5 minutes with cylinder of nitrogen (99.6% extra dry grade) at 60 ± 10 cc per minute.

2.6 Oxidation Test: Rapidly increase the temperature of the sample (20° C/min or greater) from 100° C or lower initial temperature to 199 ± 1° C. After thermal equilibrium is obtained (steady recorder signal) switch to 80 ± 20 cc per minute oxygen flow and simultaneously start time-base recording. The oxygen used for the test should be equivalent to or better than 99.6% extra dry grade.

2.7 Induction Period: The oxygen induction point shall be recorded as time zero, and the chart speed shall be sufficient to provide a clearly discernible slope at the start of the exothermic reaction. The test in the pure dry oxygen atmosphere shall continue until the exothermic peak is produced. The intersection of the tangent of the exothermic sloped line with the extended base line will be drawn. The time zero to this intersection point is read from the base line and recorded as the oxidative induction time.

134

SPECIFICATION FOR 11KV H.G. FUSE UNITS WITH 11 KV SOLID CORE INSULATORS

1.0 **Scope**: This specification covers the manufacture, testing at manufacturer works and supply of 11kV Horn Gap Fuse Units along with 11 kV Solid Core Insulators. The Fuse units shall conform to the enclosed drawing.

2.0 **Atmospheric Conditions**: The fuse units are to be installed at places with the following weather conditions.

Temperature:	Maximum ambient	- 50°C
	: Average	- 32°C
	: Minimum	- 05°C
	: Altitude	- Max. 1000 Mtrs. above sea level

3.0 **Construction:**

3.1 The construction of the fuse units shall be of high quality as it is intended to ionize the fault current at the time of expulsion. The fuse shall generally conforms to IS, dealing with high voltage expulsion and drop out fuses.

3.2 The fuse units shall be suitable for horizontal mounting only. The mounting shall be by using 45x45x5 cleat welded to 25x6 M.S. flat fixed to the central portion of the insulator. All the M.S. Parts should be hot dip galvanized as per relevant IS-

(A) **COMPLETENESS OF SUPPLY:**

The component offered shall be complete and operative in all aspects and shall conform to high standard of Engineering design and workmanship.

(B) Deviation from technical specifications: Tenderer shall furnish the details of deviations/modification proposed by him if any towards improvement of the said offer.

4.0 **INSULATORS**:

4.1 The insulator used shall be of 11KV solid core type, brown glazed porcelain suitable for highest system voltage of 12 KV. The Insulators shall generally conform to IS: 5350 (part-II) and as per the enclosed drawing.

4.2 The insulator shall be in one piece. The stresses due to expansion and contraction in any part of the insulator shall not lead to its deterioration. The insulator shall be glazed effectively

on all the surfaces except for the parts on which the particulars are supported during firing which may be left unglazed. The solid core insulator shall be baked in Temperature controlled kilns only.

4.3 Insulators shall pass visual test, dimensional test porosity test, puncture test, temperature cycle test as per relevant ISS.

Following tests shall be conducted and test certificate duly signed by a responsible officer of the supplier's organization shall be submitted.

1. Dry Power Frequency voltage withstand test.
2. Dry Power Frequency voltage flashover test.
3. Wet Power Frequency voltage withstand test.
4. Wet Power Frequency voltage flashover test.
5. High voltage impulse voltage withstand test.
6. High voltage 50% impulse voltage flashover test.
7. High voltage visible discharge test.
8. Electro mechanical failing load test.

4.4 **MARKING:** Each insulator shall be legibly and indelibly marked with the following:

1) Name of trade mark of the manufacturer.
2) Month and year of manufacture.
3) ISI certificate mark, if any

The marking shall be durable and shall be printed by the transfer process before firing. Stickers are not permitted.

The bidders can use insulators conforming to relevant ISS and having ISI Mark.

The successful bidder should get the insulator make approved by BESCOM, before making supplies/take up bulk production.

5.0 **ARCING HORNS**: The H.G. Fuse unit shall be provided with arcing horns of 8mm diameter hot dip galvanized iron rod. The other particulars like G.I. Strip, brass wing nuts, G.I. Flats etc., are furnished in the drawing enclosed.

6.0 The H.G. Fuse units shall be designed to withstand the voltage that is indicated for solid core insulators.

7.0 Type tests on one H.G. Fuse unit as per the provisions of the relevant shall be conducted at CPRI or in a recognized laboratory approved by BESCOM and the test certificates along with the drawing attested by the concerned laboratory shall be submitted for approval before commencing supplies.

8.0 **PACKING**:

The H.G. Fuse Units shall be securely packed in crates or boxes so as to withstand Rough handling during transit and storage.

9.0 **INSPECTION**:

9.01 All tests and inspection shall be generally made at the place of manufacturer. Purchaser (BESCOM) shall be provided with all reasonable facilities, without charge, to satisfy him that the material is being furnished in accordance with this specification. Purchaser and its representative shall at times be entitled to have access to the works and to all places of manufacture where insulators are manufactured and the supplier shall afford all facilities to them for unrestricted inspection of the works, inspection of materials and inspection of manufacturing process of insulators for conducting necessary tests and specified herein.

9.02 The supplier shall keep the Purchaser informed in advance of the time of Starting and progress of manufacture of insulators in various stages so that arrangements could be made for inspection.

9.03 No material shall be dispatched from its point of manufacture unless the material has been satisfactorily inspected and tested.

9.04 The BESCOM has the right to have the tests carried out at its own cost by an independent agency, when considered necessary.

10.0 NAME PLATE:

Each H.G. Fuse Unit shall be provided with a Name plate of minimum size 100x40mm and shall be fixed with the following details which are legibly and indelibly marked.

1) Name of the material
2) Name of Manufacturer
3) BESCOM
4) Voltage Rating.
5) Purchase Order No. and Date
6) Sl.No.

11.0 SAMPLE

The Contractor shall submit two samples and get them approved by the competent authority before taking up the manufacture. The two approved samples will be kept as under

i) One approved sample will be with the manufacturer at the manufacturing premises so that so that the inspecting officer can inspect the materials offered for inspection with reference to the approved sample.

ii) The second approved sample will be kept at BESCOM stores, Rajajinagar, Bangalore.

12.0 GUARANTEED TECHNICAL PARTICULARS:

The Bidder shall furnish the guaranteed technical particulars of the H.G. Fuse Unit with Solid Core Insulators to be offered in the enclosed proforma:

13.0 BILL OF MATERIALS:

The bill of materials is as indicated in the drawing.

----------X---------

BANGALORE ELECTRICITY SUPPLY COMPANY LIMITED

TECHNICAL SPECIFICATION FOR INSULATION PIERCING CONNECTORS, ANCHOR (DEAD END) & SUSPENSION ACCESSORIES & OTHER ACCESSORIES FOR AERIAL BUNCHED CABLES FOR WORKING VOLTAGE UPTO AND INCLUDING 1100 VOLTS.

1.0 SCOPE

This specification covers the design, manufacture, assembly, testing and supply of Accessories for anchoring, suspending & making connections to Aerial Bunched Cables rated 1100 volts and insulated with cross-linked polyethylene.

2.0 STANDARD

The design, performance and test requirements shall confirm to this specification and the following standards. However in case of any conflict, the requirements of this specification shall prevail.

1.0 NFC 33-020 Insulation Piercing Connectors
2.0 NFC 33-004 Electrical Ageing Test
3.0 NFC 33-040 Suspension Equipments
4.0 NFC 33-041 Anchoring Devices
5.0 IS 14255 LV Aerial Bunched Cables

The Devices shall also be compatible with the cables of sizes & dimensions as defined in the Cable Specifications for the cables with which they are intended to be used.

3.0 CABLE DATA

The standard sizes and characteristics of the phase and street lighting conductors, messenger wires shall be as specified in IS: 14255-1995.

The Accessories of LT XLPE Insulated Aerial Bunched Cables (ABC) with insulated messenger cum neutral are specified below:

a) The ABC accessories should be of proven design with minimum 2 years record of satisfactory operation with a major utility. Order copies and Performance Certificates should be enclosed with the offer.

b) Since ABC accessories are to be used with insulated neutral-cum-messenger, their design should incorporate specific features to prevent damage to the insulation which meeting the required electrical, mechanical & thermal requirements.

c) All mechanical, electrical & thermal ratings should meet or exceed 90% of the corresponding ratings of the cable, or the values specified herein, whichever are more stringent.

d) The accessories should provide "Double Insulation" so that a single point failure of insulation will not result in the system tripping.

4.0 THE ABC ACCESSORIES

The ABC Accessories shall consist of the following:

a)	Insulation Piercing Connectors (IPC)	:	For making tap-off/branch connectors/service connector to an ABC line.
b)	Anchoring Assembly (AA)	:	For fitting onto a pole for anchoring the end of a length of ABC, or for a major change in direction.
c)	Suspension Assembly (SA)	:	For supporting a length of ABC at an intermediate pole in a length, with small angle of deviation.
d)	Service clamp (SC)	:	For anchor Insulated service lines (armoured or unarmoured)
e)	Transformer Connections	:	For connection to the transformer bushing.
f)	Junction Sleeves	:	For Phases, neutral messengers & Street lighting conductor.
g)	ABC Service Main Distribution Box	:	For Distribution of multiple no. of Service Connections from Main AB cable.
h)	Stainless steel strap & buckles	:	For fixing clamps to pole through aluminium bracket for dead end & suspension clamps.

5.0 Insulation Piercing Connectors (IPC)

Insulation Piercing Connectors (IPC) are used for making Tee/Tap-off/ Service connectors to an ABC/Bare Overhead Line. Insulation Piercing Connectors are designed to make a connection between the uncut main conductor and a branch cable conductor without having to strip either cable to expose the conductor instead the tightening action of the IPC will first pierce the Insulation, then make good electrical contact between the main end and branch conductor while simultaneously insulating and sealing the connection.

5.1 Constructional Features of IPC.

1. The housing shall be made entirely of mechanical and weather resistant plastic insulation material and no metallic part outside the housing is acceptable except for the tightening bolt.

2. Any metallic part that is exposed must not be capable of carrying a potential during or after connector installation.

3. Screws or nuts assigned for fitting with IPC (Insulating Piercing connector), must be fitted with torque limiting shear heads to prevent over tightening or under tightening (min & max torque values to be specified by Manufacturer).

4. The IPC must perform piercing and connection on Main and Branch cable simultaneously using single bolt for tightening as multiple bolts do not ensure even tightening.

5. The IPCs shall be water proof and the water tightness shall be ensured by appropriate elastomer materials and not by grease, gel or paste alone.

6. Design of IPC should be such as to not cause damage to insulation of adjacent conductors due to vibration and relative movement during service.

7. All the metallic parts of the connector should be corrosion resistant and there should not be any appreciable change in contact resistance & temperature after overloads & load cycling.

    - The contact plates should be made of tinned copper/aluminium alloy.
    - Connector teeth should be factory greased & sealed to retard water or moisture ingress & corrosion.
    - The Insulation material should be made of weather & UV resistant reinforced polymer.
    - The outer metallic part should have potential free tightening bolts to allow safe installation on live lines.

5.2 Mechanical Tightening and Electrical Continuity:

Connectors shall be tightened up to 70% of the minimum torque indicated by the Manufacturer. At this torque electrical contact should have occurred between conductors to be joined. Then connectors shall be tightened up to the breakdown of the shear heads and lastly, upto 1.5 times the maximum torque indicated by the manufacturer, and there shall be no breakdown of any part of the connector or the core conductor.

Maximum rated torque shall not exceed 20 N.m for conductor <95 sq.mm and 30 for >95 but <150 Sq.mm. Tightening screws shall have hex. Heads of 10 mm, 13 mm or 17 mm only.

5.3 Effect of Tightening on Main Core of IPC:

The connector shall be fitted approx. at the center of the main core, which is secure between two anchoring points 0.5 mtr. To 1.5 mtr. apart. At the time of fitting the connectors, the main core shall be under longitudinal tension at 20% of the load indicated in Table-1:

Table - 1

Nominal Cross - section (Sq mm.)	*Tensile Strength (Newton)*
16	1200
25	1800
35	2500
50	3500
70	5000
150	10000

Tensile strain shall be increased to the full value indicated in the Table 1 and held minute. There should be no breakdown of the core conductor.

5.4 Effect of Tightening on Branch Core of IPC

Test specimen shall be made up as in clause 5.3 except that this shall be do the smallest cross sections of main and branch conductors within its range.

An increasing tensile load shall be applied to the Branch Conductor along the axis of the recess for the Branch cable. Load shall increase at 100 - 500 N/minute until it reaches the value specified in the Table 2 and maintained for 1 minute. No slippage or breaking of conductor shall occur.

Table - 2

Nominal Cross - section (Sq mm.)	*Tensile Strength (Newton)*
16(Alu)	290
25	450
35 & above	500

5.5 Dielectric & Water Tightness Test of IPC

1. The connector is tightened up to the minimum torque indicated by the manufacturer.
2. Connectors are mounted on

    - Minimum cross section of main core.
    - Maximum cross section of main core.

3. In each case Branch is of minimum cross section.

4. Protection caps for the branch cable are to be used in accordance with the requirements of clause 5.1.7. An additional water tight cap of any design may be used to seal one end of the main cable if it is immersed under water. No additional gel or any protection is to be provided while installing connector.

5. The entire assembly shall be immersed at a depth of approx. 30 cms. For 30 minutes with the free ends of main and branch cable out of water.

6. An AC voltage of 6 kV shall be applied between the water bath and each of the cores in turn for 1 minute. There shall be no flashover or electrical tripping with a trip setting of 10 mA + 0.5mA.

5.6 Electrical & Ageing Test of IPC.

1. Any one of the two test configurations are used according to Table 3 with the Connections tightened to the minimum torque specified by their manufacturers and resistance recorded.

Table - 3

Configuration	*Main core cross section*	*Branch core cross section Tensile Strength (K.N)*
1st Configuration	Minimum main	Maximum branch
2nd Configuration	Maximum main	Maximum branch

2. The configurations are subjected to 200 heat cycles by injecting suitable current into them. In each cycle the temperature of the branch conductor shall be raised from ambient to 120 + 5°C as, measured by a thermocouple.

3. The duration of each heating cycle is chosen to maintain a sufficiently steady temperature of 120 + 5°C for 15 minutes. The duration of each cooling cycle is chosen to bring the conductor temperature to within 2°C of ambient. The test configuration shall have 6 IPC connected in 3 parallel loops of main and branch

with three such loops being in series. The initial scatter between the six value for connector resistance (one value for each connector) at cycle zero shall be lower than or equal to 0.30

4. Nominal heating current is indicated in the Table-4. It shall be permissible to accelerate the temperature rise by using a current up to 1.5 times the nominal current and to accelerate the cooling period by use of a fan or air blower.

Table - 4

Nominal Cross - section (sq. mm.)	*Nominal Heating Current (A)*
16	102
25	139
35	175
50	225
70	283
95	350
120	412
150	480
185	545
240	670

5. The over current test of Clause 5.1.9 shall be done after 50 cycles if the connector is a safety connector designed to ground a phase connector while the line is being worked on.

6. At the end of the 200 cycles the resistance shall again be measured. It shall not differ from the initial value by more than 12%. For each connector, maximum and minimum of difference between reference core temperature and connector temperature shall be within+_10 C of mean of difference between the reference core temperature and connector temperature. Maximum temperature of nay connector should not exceed reference core temperature.

5.7 Over Current Test of IPC (as applicable to size):

Over current test is required to establish the performance of Safety Connectors that are intended to provide a safe path to ground for the phases while the line is de-energized for working. It establishes the performance of the connector under short term over load conditions. Over Current Test of IPC: This test is applicable for network connectors since it may be subjected to overloads or short circuits which are not restricted by protection devices.

- After the first 50 cycles of clause 5.6.2, the connectors are subjected to 4 over currents of 1 sec duration each.

- The conductor temperature at the start of the over current test should be not more than 35OC.

- Current density during over current shall be 100 A/Sq mm for Aluminium and 95 A/Sq mm. for Aluminium - Alloy Conductor.

- Variation in time of over current is permissible between 0.85 sec & 1.15 sec., provided if maintains the relationship I2t = K where,

  I = rms value of over current in Amps.
  t = time in seconds
  K= Constant

- After the over current test the electrical ageing test shall be resumed.

6.0 Anchoring Clamp for Insulated Messenger:

The clamps should be designed to Anchor LT-AB cable with insulated messenger. The clamp should consists of an Aluminium alloy corrosion resistant casted body or climatically resistant polymer material, bail of stainless steel and self adjusting plastic wedges which shall anchor/hold the neutral messenger without damaging the insulation.

- No losable part in the process of clamping arrangement
- The clamp should conform to the standard NFC 33041 and 33042 or
- equivalent I.S. if any.
- The clamp body should be made of corrosion resistant Alluminium alloy or climatically resistant polymer material, bail should be of stainless steel and wedges should be weather and UV resistant polymer. λ Ultimate tensile strength of the clamp should not be less than 15 kN for 50/70 sq.mm insulated messenger wire / 10 KN for 25/35 sq.mm insulated messenger wire.
- Slip load of the clamp should not be less than the values specified in clause 4.0.c and Table 6 of the standard for various sizes.

Anchoring assemblies are used to firmly attach the messenger of ABC to a support and transmit the mechanical tension.

- at the end of a run or to the supporting structures
- at a major change in direction.

6.1 Each **Anchoring Assembly** shall include.

- One number tension bracket.
- One number wedge type tension clamp
- Flexible Rope for fixing tension clamp to bracket.

Anchoring assemblies shall be supplied in sets to ensure compatibility of the materials against corrosion or wear of moving parts.

6.2 Tension Bracket of AA

The tension bracket shall be made out of a single piece of Aluminium alloy suitable for attachment to a pole either by

b) 16mm (galvanized) steel bolt (s) or

c) Two stainless Steel straps of 20 +_0.2x 0.7 +_0.5mm and buckle with aluminium bracket. The SS strap shall have tensile strength of 7.5KN min, elongation 30% min, finish of 2B, and of corrosion & wear resistant stainless steel material.

Material = SS202, Raw material Composition tolerance= As per ASTM 'A480'

The tension bracket should be designed to ensure the Flexible rope cannot slip out at any angle. The inner side of the bracket should be min 100 mm from the surface of the pole.(NFC-33-041)

The tension bracket should be rated and tested for the loads specified in Table-5. The load shall be applied at an angle of 45° from the normal to the surface of mounting of the bracket.

The bracket design should be in such a way that minimum distance between the pole and the anchoring clamp fixing point shall be 100+_20mm.

The Rope should be of length to maintain at least 150mm distance between bracket and body clamp and shall have sufficient mechanical strength to withstand the mechanical test for the complete assembly tests in this specification.

Table – 5

Conductor Size (Sq mm.)	Rating	Load for deformation <10mm (Newtons)	Load for deformation <30mm & no-break (Newtons)
25-35	1500 Kg	12,000	15,000
50-95	2000 Kg	15,600	19,500

6.3 Flexible Rope of AA

1. The Anchoring assembly shall be supplied with a stainless steel flexible Rope to connect the Tension Clamp to the Tension Bracket.

2. The rope should have sufficient flexibility to ease the torsional movement of the ABC System.

3. The Rope should be pre-fitted with compression type end fittings to secure the tension clamp or through any other suitable means.

4. A wear resistant moveable saddle should be un-loosably fitted on the Rope to prevent abrasion at the point of fitting into the tension bracket.

5. Rope should have sufficient mechanical strength to withstand the mechanical test for the complete assembly tests in this specification.

6.4 Wedge Type Tension Clamp of AA

1. Wedge type clamps shall be used for clamping the messenger without damaging the insulation.

2. The clamp shall be capable of clamping an uncut messenger so that it can continue without break to the connecting point or next span.

3. The clamp shall be fully insulating type of mechanical and weather resisting thermoplastic.

4. No bolts or loose parts are allowed as part of the Clamping system.

5. No tools shall be needed for fitting the messenger into the clamp.

6. The clamp shall be self tightening and capable of holding without slippage the load specified in the Table-6.

Table - 6

Conductor size		Rating (kg)	T start (1Minute) (Newtons)	T final (1Minute) (Newtons)
Sq mm	Dia (mm)			
25-35	8-11	1000	8,000	10,000
50-70	12-14	1500	12,000	15,000
70-95	13.5-16	2000	12,000	15,000

After fitting the insulated messenger in the clamp, load T start will be held for 1 minute & then load increased to T final at rate between 5000 - 7,500 N/mtr. In each case there shall be no breakdown of any part of clamp and slippage of messenger in relation to the clamp.

6.5 Voltage Test on Clamp of AA

- Voltage test is carried out on anchor clamps to ensure no damage is caused to the insulated messenger.
- A conductive rod of dia. corresponding to the average dia. that can be accommodated in the clamp is fitted into the clamp, protruding by approx. 50mm at each end of the tightening piece.
- The rod and clamp is subjected to tensile load as stated in Table 7 below when fixed to a support in its normal manner.

Table - 7

Conductor Size		Normal Rating (kg)	Load Applied (N)
Sq mm	Dia (mm)		
25-35	8-11	1000	2000
50-70	12-14	1500	4000
70-95	13.5-16	2000	6000

- A power frequency voltage of 6 kV is applied for 1 minute between the rod and conductive part of the clamp, or fixation point in absence of conductive part.
- No breakdown or flashover shall occur. There shall be no tripping due to leakage with a setting of 10 + 0.5 mA.

6.6 Endurance under Mechanical & Thermal Stress of AA

1. Test is done on clamp with largest cable in its range and also to comply with loads specified in table 8 of the standard.
2. A neutral messenger is fitted between two anchor clamps, with clamp spacing approx. 5 mtr. & 1 mtr. Of messenger protruding from the end. Marks are made to enable measurement of slippage.
3. The sample is subjected to 500 cycles of 90 minutes each as described below
4. Messenger temperature is raised by passing an AC current to 60 +3OC within 15 minutes. This temperature is maintained for at least 30 minutes to give a total heating period of 45 mts. Per cycle.
5. Messenger is allowed to cool naturally to ambient for further 45 minutes to complete 90mts. Cycle time.

6. Mechanical load is applied during the cycle as per table 8 below. Load F1 is applied throughout the cycle, except for a short period of 5 sec. to 60 sec. when it is gradually increased from F1 to F2 at any time during the last 15 minutes of the 90 minute cycle.

Table - 8

Conductor size		Rating (kg)	F1 (Newtons)	F2 (Newtons)
Sq mm	Dia (mm)			
25-35	8-11	1000	2,200	5,000
50-70	12-14	1500	4,000	7,500
70-95	13.5-16	2000	4,500	10,000

7. There should be no slippage greater than 4 mm after 2 cycles or greater than 8 mm after 500 cycles.

8. Voltage test is done at the end of the 500 cycles by immersing the test specimen of neutral messenger and clamps in water of resistively not less than 200 Ohm mtr. For 30 minutes.

9. A voltage of 10 kV ac is applied for 1 minute between messenger and water bath using a trip setting of 10 + 0.5 am. There should be no breakdown or tripping.

7.0 Suspension clamp for insulated neutral messenger:

The clamp should be designed to hang L.T - AB cable with insulated neutral messengers. The neutral messengers should be fixed by an adjustable grip device. A movable link should allow longitudinal and transversal movement of the clamp body.

- No losable part in the process of clamping arrangement.
- The clamp should conform to the standard NFC 33040 or equivalent I.S, if any.
- The clamp and the link made of Polymer should provide an additional
- insulation between the cable and the pole.
- The clamps and movable links should be made of weather and UV resistant glass fibre reinforced polymer.
- Clamps should be fixed with pole by eye hook / aluminium bracket by means of movable link securely fitted. Bracket should be made of corrosion resistant alluminium alloy. Or, Clamp should be fixed with pole by SS bands plus bracket.
- Ultimate tensile strength of the clamp should not be less than 15 KN for 50/70 sq.mm. Insulated messenger wire 10 KN for 25/35 sq.mm. insulated messenger wire.

Suspension Assembly is used for supporting an ABC by installation on the messenger at an intermediate point of support such as a pole. It can accommodate small angles of deviation up to 30°.

Each Suspension Assembly shall consist of :

- One number Suspension Bracket.
- One number moveable (articulated) connecting link.
- One number Suspension Clamp.

Suspension Assemblies shall be supplied in sets to ensure compatibility of the materials against corrosion or wear of rotating/moving parts.

7.1 Suspension Bracket of SA

The Suspension Bracket shall be made from single piece aluminium alloy suitable for attachment to a pole by either.

a) 16 mm galvanized steel bolt or
b) Two stainless steel straps.

The Suspension Bracket shall be provided with an upper bulge to prevent the clamp from turning over on the Bracket for more than 45° from the horizontal or to within less than 60 mm from the pole / fixing structure.

The Suspension Bracket should be so designed to ensure that the articulated link cannot slip out of it.

Suspension Brackets shall be designed to withstand a load applied at the anchoring point of the movable link as per Table - 9 below without deformation of more than 10mm or breakdown at 33O below horizontal (there should be no longitudinal component of load parallel to the plane of fixing).

Table - 9

Conductor Size		Normal Rating (kg)	Load Applied (N)
Sq mm	Dia (mm)		
25-54	8-15	1500	12,500
70-95	13-17	2000	14,000

7.2 Movable (Articulated) Link of SA

Movable Links are used between the Suspension Bracket and Suspension Clamp to allow a degree of movement and flexibility between the two.

Moveable Links should be made fully of insulating type of mechanical and weather resistant thermoplastic. A metallic wear resistant ring should however be fitted at point of contact between the Suspension Bracket and the movable link.

The Movable link should be unloosably fitted to the Bracket and the Clamp.

7.3 Suspension Clamp of SA

- Suspension Clamps are used for locking the messenger of the ABC bundle without damaging the insulation or allowing the messenger to become dismounted from the fitting.
- The Suspension Clamp shall accommodate messenger wires from 25 -54 sqmm and 70-95 sq.mm as in Table 9 above.
- The Suspension Clamp shall be made fully of insulating type of mechanically strong and weather resistant plastic.
- Bolts should not be used for clamping / locking the messenger in the Clamp.
- There shall be no losable parts in the Suspension clamp.
- The Suspension Clamp should be unloosably fitted to the rest of the Suspension Assembly.

7.4 Mechanical Test on Clamp of SA

The Sub Assembly shall be subjected to a vertical load applied as per drawing in accordance with Table-10. There shall be no breakdown or permanent deformation at load T initial for 1 minute or when the load is increased to T final and released.

Table - 10

Conductor size		Rating (kg)	T start (1Minute) (Newtons)	T final (1Minute) (Newtons)
Sq mm	Dia (mm)			
25-54	8-15	1500	9,600	12,000
70-95	13-17	2000	12,800	16,000

Fig **A**

Fig. : A

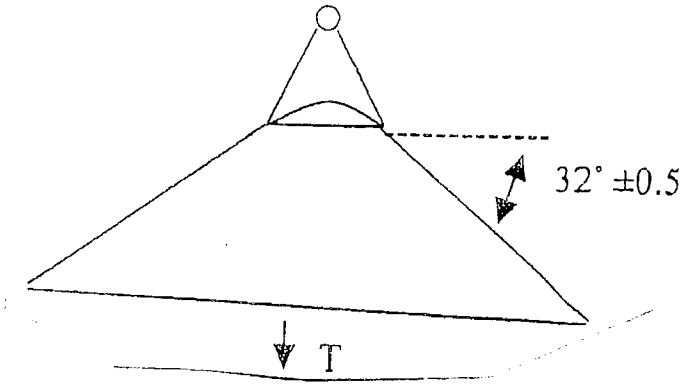

A sample messenger shall be fitted into a fixed suspension clamp and subjected to a gradually applied longitudinal load of 300 N. There shall be no permanent slippage.

7.5 Voltage Test of SA

A copper foil is wrapped at the clamping point around the maximum size of messenger allowed in that clamp. An ac voltage of 6 KV is applied between the copper foil and nearest conductive point of the clamp or into its absence to the point of fixation. The voltage should be withstood for 1 minute without breakdown or flashover.

7.5 Test Under Mechanical & Thermal Stress (as applicable)

The test specimen is made up of approx. 10mts. Of messenger wire strung between two anchor clamps with a Suspension Clamp fixed in the middle. Masses of 40 Kg. are suspended at a distance of 1-2mtr. On either side of the Suspension Clamp with a fixing mechanism of mass 2 + 1 Kg.

The specimen is subjected to 500 cycles of 90 minutes each. Each cycle consists of the following:

a) For first 75 minutes a constant longitudinal tension of 4000 N is applied to the messenger for rating of 1500 Kg. and of 4500 N rating of 2000 Kg. while 64 cycles right and left oscillation are produced on the clamp 32O on either side of the vertical.

b) During the first 45 minutes an intermittent current of 4-5 A/sq.mm is applied to maintain the conductor temp at 60 + 3 O C.

c) During the next 45 minutes of the cycle the conductor is allowed to cool down naturally to the ambient.

d) At the 75th minute, after having completed 64 oscillations, the oscillations are stopped and the longitudinal tension is increased to 7500 N for 1500 kg. Rating and 10000 N for 2000 Kg. Rating.

5.3.9.3 - No messenger slippage should occur within the Suspension Clamp during the 500 cycles.

5.3.9.4 - At the end of the 500 cycles, the messenger is immersed in water for 30 minutes. It is then tested to withstand 10 kV ac for 1 minute with a trip setting of 10 + 0.5 mA. There should be no breakdown or flashover.

8.0 Acceptance Tests

8.1 The following shall constitute Acceptance Tests for **Insulation Piercing Connectors (IPC)** : (* please refer table below)

- Visual *
- Dimensional (as per SCD and overall dimensions submitted with
- Tender Offer)*
- Electrical Ageing Test ***
- Dielectric and Water Tightness Test. **
- Mechanical Tightening Test for shear head behavior, electrically continuity and over-tightening **
- Effect of Tightening on Main Core **
- Effect of Tightening on Branch Core **

The above tests are to be carried out as per sampling plan below. However electrical ageing test on IPC (marked***) is to be done on only one connector of each type and size.

In case of random failure/defect, double the sample lot is to be drawn and there should be no failure/defect exceeding half the permissible defects (rounded down) shown in the chart.

Lot Size	For test marked *	Max permissible defects	For test Marked **	Max permissible defects
	Sample Size		Sample Size	
Upto 100	2	Nil	2	Nil
101 to 1000	6	Nil	4	Nil
>1001	0.01% subject to min. 6 pieces	0.1% of pieces checked	4	Nil

153

8.2 The following shall constitute acceptance tests for **Anchor Assemblies**:

- Visual *
- Dimensional (as per SCD and overall dimensions submitted with Tender Offer)*
- Mechanical Test on Bracket**
- Mechanical Test on Clamp **
- Voltage Test *

8.3 The following shall constitute acceptance tests for **Suspension Assemblies:**

- Visual *
- Dimensional (as per SCD and overall dimensions submitted with Tender Offer)*
- Mechanical Test on Bracket**
- Mechanical Test on Clamp **
- Voltage Test *

The above tests (for AA & SA) are to be carried out as per sampling plan below. In case of random failure/defect, double the sample lot is to be drawn and there should be no failure/defect exceeding half the permissible defects (rounded down) shown in the chart.

Lot Size	For test marked *	Max permissible defects	For test Marked **	Max permissible defects
	Sample Size		Sample Size	
Upto 100	2	nil	1	Nil
101 to 500	5	1	2	Nil
501 – 2500	10	2	2	Nil
501 – 2500	10+0.2%	2+10% pf addl sample quantity	4	1

9.0 Type Test:

For all accessories, the Type Test Report should be submitted from an Independent NABL Accredited Laboratory like CPRI or the ILAC MRA signatory Laboratory in case of a foreign manufacturer covering the following (on any convenient size of fitting of same design made from the same materials). The type test should not be older than 3 years as on the date of tender opening. The bidder shall submit the type test reports along with the bid.

The installation of the connectors shall be done in the laboratory following instructions provided by the manufacturer. The Test report shall record the embossing and marking on the connector.

The following shall constitute Type Tests:

9.1 For Insulated Piercing Connectors:

a) Electrical Ageing Test
b) Dielectric and Water Tightness Test.
c) Mechanical Tightening Test
d) Effect of Tightening on main Core
e) Effect of Tightening on Branch core

Over-current Test (if applicable for the size)

9.2 Type Test for Suspension Assembly (SA)

a) Mechanical Test
b) Voltage Test
c) Climatic Aging Test
d) Corrosion Test
e) Endurance Test under Thermal & Mechanical Stresses (if applicable)

9.3 Type Tests for Anchoring Assemblies (AA)

a) Mechanical Test
b) Voltage Test
c) Dynamic Test
d) Climatic Aging Test
e) Corrosion Test
f) Endurance Test under Thermal & Mechanical Stresses

GA drawing and approximate dimensions shown in the Annexed drawings are for illustration purpose only. The bidder/manufacturer shall furnish his drawings confirming to the technical requirements of this specification.

10.0 SERVICE CLAMP

The clamps should be designed to anchor insulated service lines (armoured or unarmored) with 2/4 conductors.

- The clamps should be made of weather and UV resistant polymer.
- The service clamp should accommodate cables from 6 mm sq to 35 sq mm in the same clamp.

- The gripping mechanism shall consist of two insulated self wedges that are un-loosable from the body and do not require any hand tools to grip the cable.
- The clamp should conform to the standard NFC 33042 or equivalent I.S., if any. No losable
- Breaking Load of the clamp should not be less than 3 KN.

11.0 STAINLESS STEEL STRAP ASSLY

The stainless steel strap assembly shall consist of

a) Stainless steel strap of size 20+_0.2mm x 0.7+_0.05mm and shall have tensile strength of 7.5KN min., elongation 30% Min, finish 2B, and the stainless steel material shall be of corrosion and wear resistant.

b) The buckle to suit above strap shall be used.

12.0 TRANSFORMER CONNECTION

- The connection to the transformer should be made with Pre-Insulated lugs for phase and street lighting conductors and with an Alluminium Lug for neutral Messenger. If the Bus-bars-bars are of copper, the Lugs should be preferably Bi-metallic type.

- The Barrel of the lug normally insulated with an Anti-UV black Thermoplastic tube sealed with a flexible ring. Die reference, size and strip length are to be indicated on the plastic.

- Sizes covered 16-70 & upto 150 m2 Aluminium XLPE insulated cable.

- Reference standard NFC 33021 or equivalent I.S. if any.

13.0 JUNCTION SLEEVES (Mid span joints)

- The sleeves should be Pre-Insulated for phases, neutral messengers and street lighting conductors.
- Sleeve should be made of Aluminium, insulated with an Anti-UV black thermoplastic tube hermetically sealed two ends with 2 flexible rings.
- Die reference, size and strip length are indicated on the sleeve itself.
- Sizes needed: 16-70 & upto 150 mm2 for Alluminium XLPE insulated cable.
- Reference standard: NFC 33021 or equivalent I.S. if any.
- Design as per furnished drawing or equivalent.

14.0 EYE HOOKS

- Eye looks should be designed as to hold suspension clamps and Dead end clamps and to be installed with the pole clamp.
- Eye-hooks should be made of forged Galvanised steel.

- The clamps corrosion resistance should conform the standards I.S. 2629 & I.S 2633.
- Bolts and nuts should be made of hot dip Galvanised steel according to VDE 0210 and VDE 0212.
- Ultimate Tensile strength (UTs) of the clamp should 20 KN.
- Design as per furnished drawing.

15.0 SERVICE MAIN DISTRIBUTION BOXES

SCOPE:

1.1 The L.T. Distribution Box shall be used for connection through overhead conductors or ABC line and for giving connections to the consumers. This specification covers the design, manufacture, inspection, testing and supply of L.T. Distribution Box. The L.T. Distribution Box will be installed at the Poles and it shall withstand solar radiations, rain, wind pressure and pollution.

2 CONSTRUCTIONAL AND TECHNICAL PARTICULARS:

2.1 The Distribution Box shall be made from 20 SWG CRCA MS sheet by Deep Drawn Method with Powder Coating. Size of the box shall be 418mm x 300mm x 120mm as shown in drawing. There shall not be any welding joint to make base and cover of the Distribution box. Roof of the box shall be tapered on both sides to drain the rain water.

2.2 Distribution box shall have Insulated Multiple Outgoing Connectors for R, Y, B Phases and Neutral. Distribution box shall have arrangement for one incoming cable of three phase of size up to 4core 35mm^2. Arrangement for four outgoing cables of size up to 4core 16mm^2 for three phase connection shall be provided in the distribution box. Each Incoming & outgoing cable shall be fixed inside the connection terminals by two screws of size not less than M8. The connection terminals shall be such that the outgoing cables can be fixed or removed easily without disconnecting the power supply. No current carrying part shall be approachable by hand or finger. Any current carrying part should be at a minimum distance of 5mm from the outer edge of the insulation. Insulation shall be Fire retardant.

2.3 Connection terminals for R, Y, and B Phases shall be mounted horizontally in a single line and Neutral shall be mounted parallel to R, Y, and B Phases in stepped pattern. Mounting arrangement shall be such that minimum clearance of 40mm is maintained between each phase and neutral. Fixing of connection terminals with the

distribution box shall be preferably non-removable type to avoid theft of connection terminals.

2.4 Box shall be provided with U-latch sealing arrangement. A hole of 8mm & 2.5mm shall be provided in the U-latch to provide a padlock & sealing of the box respectively. U-latch shall be joined with stainless steel rivet. Box should be duly powder coated after 7-tank Phosphating process. Box should be of Light Admiralty Grey color (IS-5:1993, COLOUR NO-697). The L.T. Distribution box shall be powder coated only. The facility for 7-Tank Phosphating and powder coating shall be in-house of the tenderer to ensure proper quality, since these boxes are for outdoor applications.

2.5 4 Holes for incoming cables and 4 Nos. holes for outgoing cables shall be provided on the lower wall of the box. Cable holes shall be provided with rubber / plastic glands duly pasted with the box. Incoming and outgoing cable gland shall have internal diameter of 20mm. Cable Glands shall be made such that internal diameter of glands provided for cables should be closed with the film of minimum 1mm thickness. Cable will go through the cable glands by piercing the film of the glands. Gap of minimum 100mm shall be maintained between the lower wall and neutral mounted inside the distribution box for easy handling of incoming and outgoing cables.

2.6 MARKING: Following shall be provided on the cover of box. a) Manufacturers name duly embossed. b) Utility name duly embossed c) Name of scheme duly embossed d) Danger marking in red color.

2.7 M.S. Earthing Screw of diameter 6mm with washer shall be provided in the threads of the earth clamp welded to the main body of the box.

2.8 The box shall comply with the requirement of IP54. The box shall be fully type tested along with dimensional details as per the requirement of relevant Indian Standard (latest edition) IS13947: Part-I and latest amendments. Tests shall be carried out from laboratories which are accredited by the National Board of Testing & Calibration Laboratories (NABL) of Govt. of India to prove that the complete box meet the requirement of IP54. The tests report shall be submitted along with the tender failing which the tender of the firm shall not be opened. Government approved laboratories should be accredited by the National Board of Testing & Calibration Laboratories (NABL) of Govt. of India. The type test reports shall not be older than 5 years.

2.9 Distribution Box shall be duly packed in 3Ply corrugated box. The tolerance permissible on the overall dimensions of the MMB shall be (±) 3%.

3.0 TESTS: Following tests shall be performed on the box during inspection:

3.1 Visual Examination: The L.T. Distribution box will be inspected visually, externally and internally for proper Powder Coating layer, fitting of all the components in accordance with technical Specification. 3.2 Verification of dimensions: Verification of dimensions, external / internal clearances will be carried out as per technical

specifications. 3.3 Verification of fittings: Components like insulated connection terminals, screws etc will be verified as per technical specification. 3.4 High voltage withstand test at 2.5KV: The A.C. voltage of 2.5KV, 50HZ shall be applied for one minute as follows: a) Between each Phase b) Between each Phase and earth screw c) On the insulation of connection terminals There shall not be any puncture or flash over during this test. 3.5 Current Carrying Capacity: The Current of 200 AMP shall be applied for 30 minutes through high current source on the each Phase. There shall not be overheating of the terminals during this test.

3.6 G.A. DRAWINGS ETC.

- A drawing / picture clearly showing principal parts & dimensions for all products should be submitted along with the offer.
- The principal outer dimensions of each item, l x b x w in mm and weight in kgs should be submitted along with the offer.
- The Purchaser may call for samples for verification & evaluation purposes.

4.0 GENERAL CONDITIONS OF MANUFACTURE - Annexure - 2

5.0 GTP

The Guaranteed Technical Particulars should be filled up in the given format of GTP. - Annexure-3 to 5.

18.0. TESTING STANDARD - Given in Annexure 5 & 6.

ANNEXURE - 1

METEOROLOGICAL DETAILS

Sl. No.	Parameters	Unit Value
1.	Maximum ambient air temperature	39°C
2.	Maximum temperature of air in shade	25 °C
3.	Maximum daily average temperature	38 °C
4.	Maximum yearly average temperature	30°C
5.	Maximum yearly weighted average temperature	28°C
6.	Minimum ambient air temperature	12°C
7.	Maximum relative Humidity	80%
8.	Average annual Rainfall	3175mm
9.	No. of months of tropical monsoon -	(June-Oct.)
10.	Maximum wind pressure	100Kg/m2
11.	Seismic Zone as per IS : 1893 - 1984 -	III & IV
12.	Maximum height above mean sea level	1000Mtrs.

Note:

1) Any specific meteorological data other than those listed above applicable for a particular equipment/item will be available in the technical specification for that equipment/item.

2). When values specified above contradicts with respective equipment TS, the later will prevail for that equipment.

3). The atmosphere in the area is laden with industrial and town gases and smoke with dust in suspension during the dry months and subject to tough colder months.

4). Heavy lightning is usual in the area during the months from May to November.

ANNEXURE-2

GENERAL CONDITIONS FOR MANUFACTURE

The products shall be in accordance recognized standards used in L.T. ABC or equivalent I.S., if any.

Marking : Each product shall be clearly identified with manufacturer name or trade mark, reference and capacity of the item and batch no.

Packaging : Manufacturer shall mention the packaging of each item. Installation Instruction should be included in packaging.

Type test : Each supplier should provide type test reports with the offer, carried out in accordance with one of the reference standards in NABL Accredited or equivalent Laboratory. The reports shall not be older than Five years as on the date of tender opening.

Routine test : Supplier shall provide a quality control plan, which will be implemented on each item. The manufacturer should have complete Routine Test facilities in house. Routine test reports should be submitted by the manufacturer with inspection call. The buyer reserves the right to inspect the materials at manufacturer's premises before dispatches. The manufacturer shall provide all facilities for routine tests.

Quality : Only ISO-9000 certified manufacturer will be considered for supply.

- Anchoring and suspension clamps should be installable on existing poles using existing cross arms wherever feasible by means of hooks, brackets etc. Use of stainless steel straps with buckles and aluminium bracket arrangement is also acceptable. If MS pole clamps are used they should be hot dip galvanized.

- All crimping should be done for jointing sleeves etc., with mechanical or hydraulic hand crimping tools.

ANNEXURE – 3

GUARANTEED TECHNICAL PARTICULARS FOR ANCHOR (DEAD END) CLAMPS / SUSPENSION CLAMPS SUITABLE FOR INSULATED SERVICE LINE CABLE.

Sl No	Parameters	Unit	Bidder's Offer
1	Type of Clamp		
2	Name of the Manufacturer		
3	Standard		
4	Place of Manufacturer		
5	Range of conductor size	Mm (Dia)	
6	Type of design		
7	Installation (with / without disassembly)		
8	Type & grade Metallic / Nonmetallic Material		
9	Marking		
10	Colour of Nonmetallic parts		
11	Dimensions	mm	
12	Approximate weight kg	kg	
13	Breaking Load kN	kN	
14	Test voltage (Min 6 KV AC for 1 minute)		
15	Maximum load holding capacity (Kg.)		
16	Max. vertical load sustained by clamp (Kg.)		
17	Max. longitudinal load sustained by clamp		
18	Is type test report enclosed		

ANNEXURE – 4

GUARANTEED TECHNICAL PARTICULARS FOR INSULATING PIERCING CONNECTORS (IPC)

Sl No	Parameters	For Street Light	For DB Charging	For ABC to ABC TEE
1	Name of the Manufacturer			
2	Is Manufacturer of accessories as ISO 9001-2000 company a) Copies of certificate enclosed b) Are GA Drawing enclosed			
3	Applicable standard			
4	Type of connectors Main :	5. 16-95sqmm Tap : 1.5-10 sqmm	Main: 16-95sqmm Tap : 4-35 sqmm	Main: 25-95sqmm Tap : 25-95 sqmm
5	Application	For 1.1 KV	For 1.1 KV	For 1.1 KV
6	Is any metallic part carrying potential in operation exposed during installation			
7	Are end caps of branch cable a) Slide on type b) Rigid			
8	Are torque limiting shear heads provided to tightening bolts			
9	Range of cable sizes accommodated for main & branch	Main : 16-95 sqmm Tap : 1.5-10 sq.mm	Main: 16-95sqmm Tap: 4-35sqmm	Main: 25-95sqmm Tap: 25-95sqmm
10	Min. & Max. torque defined			
11	Torque for establishing connection between main and branch			

12		For Street Light	For DB Charging	For ABC to ABC TEE
13	Max. tensile load for no breakdown of main conductor (for each cross section)			
14	Max. tensile load on branch conductor for no break/slippage			
15	Voltage withstand under water emersion			
16	Is electrical Ageing test report enclosed			
17	No. of Cycles			
18	Max. temp. at each cycle			
19	Marking and embossing on the connection			
20	Is type test report enclosed?			

ANNEXURE -5

GUARANTEED PARTICULARS FOR DISTRIBUTION BOX

Sl No	Particulars	Unit	Bidder's Offer
1	Name of the manufacturer		
2	Offered type of DB		
3	Material of DB enclosure		
4	Is spring loaded system offered		
5	Thickness min.		
6	Ingress protection class offered		
7	Suitable for cable of size (max) Incoming- Out going-	 mm mm	
8	Material of bus bar		
9	Cross sectional area of bus bar		
10	Insulation lavel		
11	Is built in Earth Plate provided		
12	Is type test reports enclosed		

ANNEXURE - 6

TESTING STANDARDS:

The Insulating Piercing Connector should conform to following std.:

Tests	Tests Standard / Test Procedure
Corrosion Qualification Test	As per NF C 33-020 (Jun '98), or equivalent I.S., if any. Exposure in Saline Environment: The exposure should be carried out as per NF en 60068-2-11 (Aug. '99) std. requirement. The concentration of Saline solution must be of 5% + 1% in mass, & the temperature of the test chamber must be maintained at 35°C + 2°C. Exposure in Sulphur environment saturated of humidity - The exposure should be carried out as per NF T 30-055 (Mar. '74) std. requirement. SO2 concentration in the chamber should be 0.067% in volume. The temperature of the test chamber should be increased to 40°C + 3°C. The total test should include four identical periods of 14 days, in which 7 days of exposure in Saline environment & in other 7 days -8 hrs. Cycles in SO2 environment & 16 hrs, in laboratory environment.
Electrical Ageing Test	As per NF C 33-020 & NF C 33-004 (Jun '98) or equivalent I.S., if any. Total no. of cycles 200, Heating time -60 mins, Cooling time -45 mins, Pause time - 2 mins.
Dielectric Investigation Test in	As per NF C 33-020 (Jun '98) or equivalent I.S., if any. The connector should be placed in an ambient temperature between Water 15°C & 30°C & relative humidity between 25% & 75%. The tightening of the connectors should be at minimal value of the torque indicated by the manufacturer. The sample should be placed in tank full of water on 30 cm height, after an immersion length of 30 mins. The set is subjected to a dielectric test under a voltage of 6KV at industrial frequency during 1 min. No flashover / breakdown should occur at 6 KV during 1 min.
Mechanical Tests	As per NF C 33-020 (Jun '98) or equivalent I.S., if any. For checking electrical continuity, shear heads & mechanical behaviour of the connector's suitable tests as per the above Specifications have to conduct.

166

Capacity needed :

For ABC 16 to 95 mm2 **Model 1 for customer service:**	Main 16 to 95 mn2 Tap 2.5 to 10 mm2 (For Street lighting)
Design as per furnished drawing **Model 2 for customer service:**	Main 16 to 95 mm2 Tap 04 to 35 mm2 (for distribution box charging)
Design as per furnished drawing **Model 3 for customer service:**	Main 25 to 95 mm2 Tap 25 to 95 mm2 (For ABC to ABC Tee Joint)
Design:	As per Standards & typical drawing furnished.

ANNEXURE - 7

TESTING STANDARDS

Impact Resistance should be according to UL 746C. Ingress Protection should be as per IP 55. The Quter Plastic box should conform to following std. -

Test / Standard	Requirements	Test Procedures
Degree of Protection IEC 60529	IP 55 - Protected against the penetration of solid objects exceeding 1.0mm in diameter and against penetration of water jets that may affect the product operation.	First Digit: A 1.0mm diameter test wire should not penetrate in any apparent opening (force = 1 N + 10%) Second Digit: A spray nozzle is used to spread a water jet in all possible directions.
Impact Resistance UL 746-C	After the test the product should not show any evidence of: - Live electrical parts accessible to the test probe, as described in this test specification. - Any results, which may affect the mechanical performance of the product. - Any results, which may increase the probability of electrical shocks.	The impact should be generated by dropping a steel ball - with a diameter of 50.8 mm and a mass of 0.535 kg - from a specified height sufficient to produce an impact energy of 6.8 J (0.69 13 kg.m.)
UV Resistance UL 746-C	The sample physical properties average value after an accelerated aging with UV radiation - should not be lower than 70% of its initial value, without aging, that is, a variation of + 30% is allowed.	According to ASTM G26, Exposure Method 1, Xenon Arc Lamp Type B or ASTM G 155, Exposure Cycle I, with continuous exposure to light and intermittent exposure to water jets, with programmed cycles of 120minutes, consisting of a 102minutes light-only exposure and a 18 minutes exposure to light and water jets.
Withstanding Voltage UL 746-C	Product should withstand the specified voltage	A 5 kV voltage should be applied to the samples after the 40 hours conditioning cycle at 23 + 2°C and 50 + 5% relative humidity plus 96 hours at 35 + 2OC and 90+5% relative humidity.

Flammability UL 94	After the UV radiation accelerated aging, the material should maintain the same original flammability level (HB).	The test can be applied to test samples molded with the same material used for the base and the cap of the box or taking a piece of these components.
Flexural Strength ASTM D790 UL 746-C	After UV radiation accelerated aging, the average value for this test should not be lower than 70% of the original value, that is, a maximum variation of 30% is allowed.	A group of test samples without aging should be tested and the average values calculated. Another group should be aged under UV radiation then it should be tested and the new average should be calculated and compared to the initial average value.
Tensile Strength ASTM D638 UL 746-C	After aging with UV Radiation, the average value should not be lower than 70% of the initial values, that is, a maximum variation of 30% is allowed.	One of the test bodies must be tested without being submitted to accelerated aging and is computed over mean values. Another group is submitted to the radiation induced aging and then tested and the new mean value is computed and compared to the first computed mean value.

BANGALORE ELECTRICITY SUPPLY COMPANY LIMITED

TECHNICAL SPECIFICATION FOR THE L.T AERIAL BUNCHED CABLES.

1.0 SCOPE:

1.1 This specification covers the design, manufacture, testing, inspection, packing, transportation and delivery of Cross linked polyethylene (XLPE) insulated Aluminium Cables twisted over a central aluminium alloy insulated messenger wire (along with associated accessories) for use on LT overhead distribution feeders, supply of required accessories and installations. The cable should be suitable for use on three-phase AC (Earthed) system for rated voltage up to and including 1100 Volts and UV protected.

1.2 The cables should be suitable for use where the combination of ambient temperature and temperature rise due to load, including temperature exposure to direct sunlight results in conductor temperature not exceeding the following:

Table: 1

Type of Insulation	Normal continuous Operation	Short circuit Operation
Cross linked polyethylene	90° C	250° C

2.0 APPLICABLE STANDRADS:

The following standards with latest updates shall be applicable unless otherwise specified:

a. IS:14255-1995 Aerial Bunched cable for working voltage up to and including 1100 Volts.
b. IS:10810 (Series) – Methods of testing cables.
c. IS : 8130 – 1984 for Aluminium conductors for insulated electric cables.
d. IS : 398 (Part-IV) 1994 : For all Aluminium Alloy Conductors (AAC) for overhead transmission purposes.-PART 4 Aluminium alloy stranded Conductors (aluminium– magnesium-silicon type).
e. IS:1885 (Part32) – Electro technical voculabory:Part32 Electric Cables.
f. IS: 6474 for insulation.

2.1 LT Aerial Bunched Cables:

Electrical Data:

a. The rated voltage of the cables shall be 1.1kV.
b. Highest system voltage: 1.2 kV.
c. Test Voltage: i) 2.5 kV / 50 Hz/ 5 min for routine tests.
   ii) 4 kV / 50 Hz/ 4 Hrs. for type tests.
d. Max. short circuit current 1.0 kA for 1 Sec..
e. Current carrying capacity at different ambient air temperatures of different sizes of phase conductors are tabulated at Table - 2.

THE CURRENT RATING AND SHORT CIRCUIT CAPACITY SHALL BE AS GIVEN BELOW:

Table - 2

Nominal sectional area	Current rating at 40°C (approx) Amps	Short Circuit capacity KA/1Sec.
(mm2)	XLPE	
16	74	1.50
25	100	2.35
35	125	3.29
50	150	4.70
70	186	6.58
95	230	8.93

3.0 GENERAL :

The insulated phase conductors shall be twisted around the insulated aluminium alloy messenger wire, which shall take all the mechanical stress. The messenger wire shall also serve as the earth-cum-neutral wire and shall be insulated.

3.1. CONDUCTORS :

3.1.1 The phase conductor shall be of Aluminium round, stranded and compacted aluminium wires confirming to H2 or H4 grade aluminium complying with requirements of IS:8130, the nominal cross sections and corresponding conductor diameter and number of wires etc., shall be as per clause 3.1.8 of this specification.

3.1.2 The phase and neutral conductors shall be insulated with black weather resistant Cross linked polyethylene insulation by extrusion process and suitable for 1100V insulation. The insulated conductors shall generally conform to the relevant IS standards as noted in clause 2.0 above. The thickness of insulation shall not exceed the limits specified in clause No.7.2, Table 4 and tolerance shall be as per clause No. 7.3 of IS:14255.

3.1.3 The power / outer –insulated neutral / street lighting conductors shall confirm to flexibility class 2 of IS 8130. The messenger cum neutral conductor or otherwise shall either be stranded circular or compacted circular type and shall have minimum of 7 strands. The surface of the conductor shall be smooth.

3.1.4 The messenger cum neutral conductor shall be heat treated aluminium magnesium – silicon alloy wires containing approx 0.5% magnesium and 0.5% silicon confirming to IS 398 Part-4 with latest revision thereof.

3.1.5 A protective barrier shall be applied between conductor and insulation. The barrier shall be compatible with insulating material and suitable for operating temperature of the cable.

3.1.6 The size of the street lighting conductor shall be 16sqmm.

3.1.7 DIMENSIONAL AND ELECTRICAL DATA.

3.1.8 The dimensional and electrical data for the cable and street lighting conductor shall be as given in Table 3, below. The resistance values are the maximum permissible.

Table 3:

Nominal sectional area (mm2)	No of strands	Dia. Of compacted conductor (mm)	Approx. mass (Kg/km)	Max. DC resistance at 20C/KM	Insulation Thickness (mm)
(1)	(2)	(3)	(4)	(5)	(6)
16	6	4.4	42	1.91	1.2
25	6	5.5	65	1.20	1.2
35	6	6.8	95	0.868	1.2
50	6	7.9	127	0.641	1.5
70	12	9.6	184	0.443	1.5
95	15	11.3	254	0.320	1.5
120	15	12.9	315	0.253	1.5

Note: a).The Resistance value given in col. 5 are max. permissible.
b).Tolerance of + 5% is allowable on diameter shown in col.3

3.1.9 **Phase Identification** :
Durable and clearly visible longitudinal ridges shall be provided as follows on each insulated conductors as indicated below for identification of phases.

For phase conductors (3 Core Cable) = R, Y, B
For Street Light Conductor = SL
For Neutral/Messenger Conductor = N

Approx. ridge dimensions are:

- Width = 1.00 mm
- Height = 0.4 mm
- Distance between consecutive ridges = 2.7 mm.

4.0 INSULATED MESSENGER (NEUTRAL CONDUCTOR):

4.1.1 The messenger shall be an All Aluminium Alloy conductor composed of 7 Wires each of nominal dia 3.55 mm Dia drawn from rod, which is manufactured in a continuous casting and rolling procedure. The properties for the individual wires before stranding shall be.

- Tensile strength not less than 294 N/mm^2
- Elongation on 200 mm not less than 4%.
- Resistivity at 20 Deg. C not exceeding 0.0328 ohm Sq.mm/m
- Density at 20 Deg. C 2.7 Kg/cubic – dm.

4.1.2 No joints are allowed in the messenger except those made on the base rod or wire before final drawing. The messenger shall be round, stranded and compacted to have smooth round surface.

4.1.3 The messenger takes all the mechanical stress and also serves as neutral conductor. The size and requirement of messenger conductor for minimum DC resistance and minimum breaking load shall be as per clause No.6.5 and Table 4 of IS: 14255.

Table-4

Sl. No.	Nominal Cross Sectional Area of Phase Conductor mm²	Messenger Conductor		
		Nominal Cross Sectional Area mm²	Maximum DC Resistance at 20° C ohm/km	Minimum Breaking Load kN
1.	16	25	1.38	7.0
2.	25	25	1.38	7.0
3.	35	25	1.38	7.0
4.	50	35	0.986	9.8
5.	70	50	0.689	14.0
6.	95	70	0.492	19.7

Note: While the limiting values in Col. 4 & 5 are to be guaranteed, a tolerance of +5% will be permissible on values in Col.2.

5.0 DESIGN:

5.1.1 The cable consists of three phase aluminium conductors and one street light aluminium conductor with black weather resistant special high density Cross linked polyethylene insulation, shall be twisted around a insulated all aluminium alloy messenger which is also the neutral conductor without fillers with lay not exceeding 35 times the diameter of the insulated phase conductor.

5.1.2 The thickness at any place may be less than the specified average value, provided that the difference does not exceed 0.1 mm + 0.1(ti) of the specified average value in clause No.7.2, Table 5 and tolerance shall be as per clause No. 7.3 of IS:14255.

5.1.3. The insulation shall be applied that fits closely on the conductor (or barrier, if any) and it shall be possible to remove it without damaging the conductor. Further, for the thickness of insulation, six measurements are made radially on a piece of insulation, as far as possible equally spaced around the circumference but not on the ridges.

5.1.4. The insulation shall be black weather resistant suitable for 1100V and confirming to IS:6474.

5.1.5. The properties of XLPE insulation shall confirm to Specification in CSR-18-19.

5.1.6. The insulation shall be XLPE of nominal thickness and its properties shall confirm to Specification in CSR-18-19.

6.0. Designation and parameters of the Finished Cables:

The designation and parameters of the finished cables shall be as given in the Table 5 below. The first part of the designation refers to the Number & size (cross sectional area in sq.mm) of the Phase Conductor, the second part refers to the (cross sectional area in sq.mm) of the Messenger.

Table: 5: Sizes

Description of Sizes	Complete Cable	Bunched
	Approx. Overall dia. (mm)	Approx. Cable mass (Kg/Km)
3x16+1x16+1x25	19	310
3x25+1x16+1x25	22	390
3x35+1x16+1x25	24	490
3x50+1x16+1x35	32	640
3x70+1x16+1x50	34	890
3x95+1x16+1x70	39	1180
3x95+1x25+1x70	41	1260
3x95+1x35+1x70	43	1360
3x120+1x16+1x95	42	1430

7.0 TYPE TESTS ON LT AB CABLE:

Unless otherwise stated in this specification, the type tests and routine/acceptance tests shall be carried out in accordance with the appropriate clauses of IS:14255 and IS:10810.

8.0 TYPE TESTS AS PER CL.10.1 AND 11.4 OF IS:14255/1995 :

a) Tests on phase/street light conductor
   - i) Tensile Test
   - ii) Wrapping Test
   - iii) Resistance Test

b) Tests on messenger conductor
   - i) Breaking Load
   - ii) Elongation Test
   - iii) Resistance Test

c) Physical test for XLPE Insulation:
   - i) Tensile strength and elongation at break
   - ii) Ageing in Air oven
   - iii) Hot set test
   - iv) Shrinkage test
   - v) Water absorption (Gravimetric)
   - vi) Carbon black:
     - content
     - dispersion

d) Test for thickness of insulation
e) Insulation resistance (volume resistivity)
f) High voltage test
g) Bending test on complete cable
h) Ultra violet test on cable to withstand ultra violet radiation.

8.1 ACCEPTABLE as per Cl.10.2 of IS: 14255/1995 :

a. Tensile tests for phase/street light conductor.
b. Wrapping Test for phase/street light conductor.
c. Breaking load test for messenger conductor.
d. Elongation test for messenger conductor.
e. Conductor resistance test.
f. Test for thickness of insulation.
g. Tensile strength and elongation at break
h. Hot set Test for XLPE Insulation.
i. Insulation resistance test.
j. High voltage test
k. High Voltage Test on DRUM, immersed in water & apply test voltage 3.5kV AC for 5 min.
l. Weather ability test for withstanding weather conditions.
m. Adherence test on insulated messenger wire

8.2 ROUTINE TESTS as per Cl.10.3 of IS: 14255/1995:

a. Conductor Resistance Test.
b. High Voltage Test

8.3 OPTIONAL TEST: This test to be insisted as part of Acceptance tests during inspection.

Bending Test on the Complete Cable :

The test shall be performed on a sample of complete cable. The sample shall be bent around a test mandrel at room temperature for at least one complete turn. It shall then be unwound and the process shall be repeated after turning the sample around its axis 180 Deg. The cycle of these operations shall then be repeated more. The diameter of the mandrel shall be 10 (D + d).

Where D= actual diameter of the cable (i.e., minimum circumscribing circle diameter in mm) d= actual diameter of the conductor in mm. No cracks visible to the naked eye are allowed.

Type Test Report:

The bidder shall submit type test reports for the particular sizes asked in the tender for the type tests carried out from NABL accredited Laboratory and the reports should not be older than 5 years as on the date of opening of tender. The bid not carrying valid type test reports will not be considered for evaluation.

8.4 SAMPLING OF CABLES:

In any consignment the cables of the same size manufactured under essentially similar conditions of production shall be grouped together to constitute a lot. Samples shall be taken and tested from each lot for ascertaining the conformity of the lot to the requirement of the specification. The number of drums(n) to be selected from the lot of drums(N) of consignment of cables shall be in accordance with column 2 and 1 of following table:

Table 6: Number of Drums to be selected Sampling and permissible Number of Defectives.

Number of Drums in the Lot (1) N	Number of Drums to be Taken as Sample (2) n	Permissible Number of Defectives (3) a
Upto 50	2	0
51 to 100	5	0
101 to 300	13	0
301 to 500	20	1
501 and above	32	2

The sample shall be taken at random. In order to ensure randomness of selection, random number table shall be used as per IS 4905.

Number of tests and criteria for conformity: Suitable length of test sample shall be taken from each of the drums selected. The test sample shall be subjected each of the acceptance test. A test sample is defective if it fails in any of the acceptance test. If the number of defectives is less than or equal to the corresponding permissible defective(a) given in the table 9 the lot shall be declared as conforming to the requirements of acceptance test, or otherwise not.

9.0. PACKING AND MARKING :

The Cable shall be wound on non-returnable wooden drums conforming to IS: 10418 /1982 with latest amendment thereof. The ends of the cable shall be sealed by means of non-hygroscopic sealing materials. The drum shall be marked with the following.

a. Manufacturer's Name or Trade Mark.
b. Type of cable and voltage grade.
c. Drum number or identification number.
d. Number of cores and size of cable.
e. Number and length of pieces of cable in each drum.
f. Gross / Net mass of the cable.
g. Direction of rotation of drum. (By means of an arrow).

9.1 The drums shall be of such construction as to assure delivery of conductor in the field free from displacement and damaged and should be able to withstand all stresses due to handling and the stringing operation so that cable surface is not dented, scratched or damaged in any way during transport and erection. The cable shall be properly lagged on the drums. The cable drum shall be suitable for wheel mounting.

9.2 The min. drum length of cable shall be 500 mtrs, the tolerance ± 5%.

9.3 MARKING OF CABLE:

All the cables shall have the following marking embossed on the insulated phase conductors for identification: letters **BESCOM; Ref P.O & Date** in addition to manufacturer's name or trade mark year of manufacture at regular intervals of not more than one meter. The cables with cross linked polyethylene insulation shall be identified throughout the length of the cable by the legend 'XLPE 90'.

10.0 QUALITY ASSURANCE PLAN

10.1 The successful bidder shall submit following information to the owner.

10.2 Test certificates of the raw materials and bought out accessories.

10.3 Statement giving list of important raw materials, their grades along with names of sub-suppliers for raw materials, list of standards according to which the raw materials are tested. List of tests normally carried out on raw materials in presence of bidder's representative.

10.4 List of manufacturing facilities available

10.5 Level of automation achieved and lists of areas where manual processing exists.

10.6 List of areas in manufacturing process, where stage inspections are normally carried out for quality control and details of such tests and inspection.

10.7 List of testing equipments available with the bidder for final testing of equipment along with valid calibration reports.

10.8 The manufacture shall submit manufacturing quality plan (MPQ) for approval & the same shall be followed during manufacture and testing.

10.9 The successful bidder shall submit the routine test certificates of bought out raw material/accessories and central excise passes for raw material at the time of inspection.

11.0 GUARANTEE:

The supplier of AB Cable shall guarantee overall satisfactory performance for minimum period of 5 years.

11.1 At least three copies of latest type test reports shall be furnished. One copy shall be returned duly certified by the owner, only after which the commercial production of the concerned material shall start.

11.2 Copies of acceptance test reports shall be furnished in at least five sets (each set for GM, TA&QC/Procurement/P&M). One copy shall be returned duly certified by the owner, only after which the materials shall be dispatched.

11.3 Record of routine/internal test reports shall be maintained by the supplier at his works for periodic inspection by the owner's representative.

11.4 Test certificates of test during manufacture shall be maintained by the supplier. These shall be produced for verification as and when desired by the owner.

12.0 INSPECTION:

12.1 The owner's representative shall at all times be entitled to have access to the works and all places of manufacture, where AB Cables and its component parts shall be manufactured and the representatives shall have full facilities for unrestricted inspection of the supplier's and

sub-supplier's works, raw materials, manufacture of the material and for conducting necessary test as detailed herein.

12.2 The material for final inspection shall be offered by the supplier only under packed condition. The owner shall select samples at random from the packed lot for carrying out acceptance tests. The lot offered for inspection shall be homogenous and shall contain AB Cables manufactured in 3-4 consecutive weeks.

12.3 The supplier shall keep the owner informed in advance of the time of starting and the progress of manufacture of material in their various stages so that arrangements could be made for inspection.

12.4 No material shall be dispatched from its point of manufacture before it has been satisfactory inspected and tested unless the inspection is waived off by the owner in writing. In the later case also the material shall be dispatched only after satisfactory testing specified here in has been completed.

12.5 The acceptance of any quantity of material shall in no way relieve the supplier of his responsibility for meeting all the requirements of the specifications and shall not prevent subsequent rejection, if such materials are later found to be defective.

12.6 The prospective bidders should furnish the GTP of AB Cables as per Annexure-1.

(178)

General Technical Parameters

Sl. No.	Particulars	unit	LT UG Cable
1	Cables		
	a) Name of manufacturer		
	b) Place of manufacture		
2	Cable Type		A2XFY
3	Applicable specification & standards voltage Grade		IS: 7098 (Part-1) /1.1kV
4	Suitable for effective Earth/Unearth system		
5	Permissible voltage & frequency variation for satisfactory operation		
6	**Continuous current for standard conditon as per IS:**		
	a) In air (45° C)	Amps	
	b) In Ground (30° C)	Amps	
	c) In Duct	Amps	
7	**Conductor**		
	a) Material		Aluminium conductor H2 OR H4 Grade
	c) Geometrical cross sectional area	mm²	
	b) Form of conductor		Strandard circular, class-2 as per IS:8130
	d) Number of Strands:	Nos	
	e) Diameter of Wire : mm before bunching	mm	
	f)Nominal continous operation	deg C	
	g)Short circuit condition	deg C	
	h) Maximum DC resistance of the conductor at 20° C	Ω/KM	……..**(CR value only for reference)** Resistance test conductor to 10mtrs sample (Not in full drum length)
	i) Sampling batch for test		10% of ordered quantity
	j) Weight of the conductor	Kg/Km	
8	**Process of Curing**		
9	**Insulation:**		
	a) Material		XLPE
	b) Thickness of Insulation (Nom)	mm	
	c) Minimum thickness of insulation at any one point	mm	
	Hot Set test:		
	a) Elongation under load	%	…….% minimum
	b) Maximum Permanent elongation after cooling	%	…….% minimum
	c) Tensile Strength at break	N/mm²	…….% minimum
	d) Elongation at break	%	…….% minimum
10	**Inner Sheath**		
	a) Material		PVC ST-2
	b) Whether Extruded		
	c) Min Thickness	mm	
	d) Colour of Inner Sheath		
11	**Armouring**		
	a) Material		Galvanized Steel Strip
	b) Type of armouring		
	c) Nominal Dimensionof Armour wire	mm	……. Dimension and % of Tolerance
	d) Number of strips (not less than as per CSR 18-19)		……. Numbers
	Armour Restivity (Max)	ohm cm	
	f) Mass of Zinc coating	gm/mm²	
12	**Outer Sheath**		
	a) Material		PVC Compound Type ST-2
	b) Whether Extruted		
	c) Min. thickness of sheath	mm	
	d) Nominal Overall diameter of cable	mm	
	e) Thermal stability test for sheath	Minutes	**100 minutes(Min)** Number of test specimen:6 Test results shall be within the range of ± 5% variation.
	colour		
13	Short circuit withstand capacity		
	a) Short Circuit withstand capacity	KA	
	b) Duration of short circuit	sec	one
14	AC resistance per core at operating temperature	ohm/km	
15	Reactance Ohm/Km	ohm/km	
16	Capicitance per core	µF/Km	
17	Allowable maximum conductor temperature when carrying current		
	Additional data		
19	Scheme of Identification		
20	Standard Packing Length and Tolerance	Mtrs	
21	Bending Radius	mm	
22	Scheme of identification of the cable		manufacturer's name or trade mark, voltage grade, year of manufacture and the letters "**BESCOM OH-UG Cable Project**". The identification shall repeat every 300/350 mm along with length of the cable.

BANGALORE ELECTRICITY SUPPLY COMPANY LIMITED

TECHNICAL SPECIFICATION FOR L.T. AC DISTRIBUTION BOXES

1. SCOPE:

The scope of this specification is for design, manufacture, testing and supply of outdoor type L.T. distribution boxes suitable for operation on 433 volts, 3 phase, four wires AC, 50 Hz system and required to be installed at the secondary terminals of distribution Transformer centers of 100KVA and 250KVA & above.

2. COMPONENTS:

The L.T. Distribution boxes shall comprise of the following components.

1. Enclosures fabricated out of M.S. sheet
2. Bus Bars
3. Moulded case circuit breakers.

3. APPLICABLE STANDARDS:

The L.T. Distribution Boxes with its components shall conform to the following standards of Bureau of Indian Standard (IS) and International Electro Technical Commission (IEC).

1.	IS-5	Ready mixed paints.
2.	IS-104	Ready Mixed paints, Brushing and zinc chroming
3.	IS-117	Paints finishing exterior.
4.	IS- 440	Chemical analysis of copper:-
5.	IS-1079	Hot rolled carbon steel.
6.	IS-1730	Steel sheet and strip dimensions.
7.	IS-13947	Parts I & II Circuit breakers.
8.	IS-6639	Hexagonal Bolts far steel structures.
9.	IS-8828 1996	MCCB's for voltages not exceeding 1000V.

4. NORMAL SERVICE CONDITIONS:

Generally as per IS -13947 - Part I & II with latest amendments thereon.

5. DEFINITION & TERMINOLOGY - As per

i) IEC-56 Clause (3) and sub- clause thereof for circuit breakers.
ii) As per 1S-13947 Part I & II thereof for circuit breakers.

6. DESIGN & CONSTRUCTION:

The enclosure shall be fabricated out of 2mm MS Sheet. The doors shall be provided with spring loaded latch operated by common key for all boxes. Hinges shall be provided at a distance of 150mm from the top and bottom of the distribution box for easy swinging. Doors shall be of non-removable type. The design shall be such that the boxes are water tight, dust and vermin proof. U- type drains shall be

provided on the top and sides of drain away rainwater. Four angles of ventilating louvres with perforated sheet weld mesh shall be provided on both the doors for each box. Two earthing terminals one on either side of the box, legibly identified and marked shall be provided.

A general arrangement drawing of L T Distribution boxes, suitable for 100KVA and 250/300KVA Distribution Transformers is enclosed.

7. **BUS BARS:**

7.1 The Bus bars shall be of Aluminium flat and provided with PVC/heat shrink insulation with red yellow, blue and green colour code to identify each of the phases and the neutral.

7.2 Thc Bus bar clearances shall be as per drawing enclosed.

7.3 The recommended sizes of the main bus bars and vertical riser links shall be as follows:-

Capacity of Transformers	Current rating in Amps	Size of Main bus bars in mm	Aluminimum vertical riser links in mm	Number of circuits (out going)
100KVA	240	6 X 40	5 X 20	2
250KV A	630	10 X 50	10 X 20	2

Thc bus bars shall be arranged in a staggered vertical formation and shall be supported by porcelain insulators.

8. **MOULDED CASE CIRCUIT BREAKERS (MCCB):**

MCCB's shall generally comply with IS-13947 Part-I & II. The design and construction shall be in accordance with IS-8828-1996. The MCCB shall be a compact unit comprising of all the protective circuits. The MCCB's shall be suitable for 100KVA and 250KVA Transformers and shall be approved by BESCOM.

9. **RATING & CHARACTERISTICS:**

Capacity of Transformer	Continuous current	Rated short circuit rating capacity at 0.25 PFkA (rms)	Rated peak making capacity kA (rms)
100KVA	160Amps	60	105
250KVA	250Amps	60	105

a) Rated operating voltage 433V phase to Phasc
250 V Phase to neutral.

b) Rated insulation voltage 660V Minimum

c) Category as per IS 13947 -- Part I & II: Ieu, Ics- 50%.

d) Current Limiting :- The moulded case circuit breakers directly feeding the loads shall be preferably of current limiting type such that under short circuit conditions very low cut off current and are let through for better protection of loads, cables etc.,

e) Protective Release:- The MCCB's shall be fitted with suitable protective release to give overload short circuit protection. The protective release and the tripping mechanism shall be such that all three poles of the MCCB shall open in case of fault on any one/two or all three poles.

f) Current Setting: The Current of the MCCB shall be for 100% of the MCCB thermal rating. The setting shall be fixed at 100% setting suitable for momentary rating and compatible with the full load current of the Transformers.

10. **AMBIENT COMPENSATION:**
The current setting or the tripping time shall not be affected by change in ambient conditions. The ambient compensation shall be effective over 0 degree C to 55 degree C.

11. **TIME CURRENT CHARACTERISTICS:**
The protective release shall have inverse time current tripping for over load and instantaneous for short circuit.

12. **MECHANISM:**
The MCCB shall have manual closing mechanism, which shall be quick make, quick brake and trip free. The position of the knob shall give indication of 'ON', 'OFF' & 'TRIP'.

Facility for manual tripping shall be provided.

13. **TERMINATION:**
The terminals shall have adequate capacity for termination of Aluminium cables of size upto 3 x 240 Sq mm.

14. **EARTHING:**
The Earthing shall be as per clause 4.5 and sub clause there of IS 8828 – 1996 with latest revisions etc.

15. **PAINTING & FINISHING:**

The Frame work and surface of steel panels shall be treated to remove rust and scales. The prepainting procedure shall include cleaning, derusting, phosphating and painting of the distribution boxes in accordance with IS-6005. The interiors and exteriors shall be painted with admiralty grey enamel paint conforming to ISS.

16. **TESTS:**
Type and Routine Tests on the circuit breaker shall be as per IS-13947 Part I & II and as per IS- 8828 - 1996.

i) Type tests: As per clause R.1.2 (a), (b) & (c) of IS-8828-1996
ii) Routine tests: As per IS - 13947 part I & II with latest revisions there on.

17. **INSPECTION:**

In respect of bought out items the manufacturer shall use equipments/items supplied by standard/reputed manufacturers and furnish manufacturers Test Certificate as well as the proof of purchase from these manufacturers (Excise gate pass) for information of the owner. The supplier shall give the owner sufficient advance intimation to arrange for inspection of the LT Distribution Boxes. The owner shall have easy access to the manufacturers works at all reasonable times of the day.

18. **MARKING & NAME PLATE:**

Each out going and incoming circuit near the MCCB and the exit shall be dearly marked.

A Caution board of 433V rating shall be affixed on the front of the box.

A name plate incorporating the following shall be provided.

i) Manufacturer name and address
ii) Owners Identification **BESCOM.**
iii) Purchase order reference
iv) Rating of the Distribution Box
v) Rating of MCCB used with make and other ratings.

19. **DESPATCH:**

The Supplier shall fabricate one box and offer for approval before commencement of bulk supplies. The Bulk supplies shall commence only after the sample is approved. Further the manual containing operation, maintenance of the equipment/components shall be supplied along with each distribution box.

The fabrication and assembly of equipment shall be strictly in accordance with the approved drawings and no deviations shall be permitted without the written approval of the owner. All the manufacturing and fabrication work in connection with the equipment prior to approval of drawing shall be at contractors risk.

20. **PACKING & FORWARDING:**

The equipment shall be packed suitably. The contractor is responsible for any damage to the equipment due to improper and inadequate packing. The contractor without any extra cost shall supply any material found short without any extra cost.

GUARANTEED TECHNICAL PARTICULARS
MOULDED CASE CIRCUIT BREAKER SUITABLE FOR 100 & 250KVA DISTRIBUTION TRANSFORMER
ANNEXURE-III

SL. NO.	PARTICULARS	TECHNICAL PARTICULARS
1.	Name of manufacturer	
2.	Address of Office & Works	
3.	Make	
4.	Type and Model of MCCB	
5.	Number of Poles	
6.	Utilization Category	
7.	Rated Frequency, Hz	
8.	Rated Current Rating	
9.	Rated Operational Voltage (Volts)	
10.	Rated Insulation Voltage (Ui)	
11.	Rated Impulse Voltage (Uimp)	
12.	Rated Ultimate Short Circuit Breaking Capacity, Icu (kA rms)	
13.	Rated Service Short Circuit Breaking Capacity, Ics (kA rms)	
14.	Type of Operating Mechanism	
15.	Operating Principle	
16.	Type of Release	
17.	Overload Release	
18.	Short Circuit Release	
19.	Application Standard	
20.	Time Current Characteristics	

(184)

ISO 9001:2008

GENERIC REQUIREMENT

High Count Metal free Optical Fibre Cable (Ribbon Type for Access Network)

GR/OFC-05/02.MAR.2006

Release 02

TELECOMMUNICATION ENGINEERING CENTRE
KHURSHID LAL BHAWAN, JANPATH, NEW DELHI-110 001, INDIA

(185)

Transmission
ISSUE: MAR' 2006

HIGH COUNT METAL FREE OPTICAL FIBRE CABLE (RIBBON TYPE) FOR ACCESS NETWORK

GENERIC REQUIREMENTS
No. GR/OFC - 05/02. MAR 2006

(SUPERCEDES GR No. GR/OFC-05/01.JUL 2000)

©

TEC

TELECOMMUNICATION ENGINEERING CENTRE
KHURSHIDLAL BHAWAN, JANPATH,
NEW DELHI-110001.
INDIA

All rights reserved and no part of this publication may be reproduced, stored in a retrieval system or transmitted, in any form or by any means, electronic, mechanical, photocopying, recording, scanning or otherwise without written permission from the Telecommunication Engineering Centre, New Delhi.

HISTORY SHEET

Name of the Generic Requirements	No. of the Generic Requirements	Remarks
High count Metal Free Optical Fibre Cable (Ribbon Type) for Access Network	GR/OFC - 05/01. JUL 2000	First issue
High count Metal Free Optical Fibre Cable (Ribbon Type) for Access Network	GR/OFC - 05/02. MAR 2006	Second issue

(187)

CONTENTS

S. No		Page No.
1.	References	i
PART I – TECHNICAL SPECIFICATION		
2.	Introduction	1
3.	Functional Requirements	1
4.	Technical Requirements	1
PART II – GENERAL REQUIREMENTS		
5.	Engineering Requirements	21
6.	Quality Requirements	24
7.	Documentation	25
8.	Safety Requirements	25
9.	Procedure for Issue of TAC/TSEC	27
10.	Annexure- 1	29
11.	Abbreviations	30

REFERENCES

TEC STANDARDS

1. GR No. G/ORM-01/03. MAR 04	Specification for Raw Material used in manufacturing of OF Cables.
2. GR No. G/OFT-01/02. APR 06	Tools for installation & Operating the OFC & for assembly of the OF Splice Closures.
3. GR No. G/CBD-01/02. NOV 94	Drum specifications for Cable ends.
4. GR No. GR/OFC-01/04. SEP 03	Specifications for Metal Free OF Cable
5. GR No. GR/OFC-12/01. JUN 05	Specifications for Self Supporting Metal Free Aerial OF Cable (For Urban Areas)

OTHER STANDARDS (EIA/IEC/Bell Core/CISPR/ISO etc.)

1.	ITU-T G.652	ITU-T Recommendations
2.	GR-20-CORE July 98	Generic Requirement for Optical Fibre Cable (Bell Core)
3.	IEC 811-5-1, IEC 794-1-E1, IEC 794-1-2-E2, IEC 794-1-2-E3 IEC 794-1-2-E4, IEC 794-1-2-E7, IEC 794-1-2-E10, IEC 794-1-E11 IEC 794-1-2-F1, IEC 794-1-F5, IEC-60793-1-33 IEC-60793-1-B7C IEC-60793-1-34, IEC –60793-1-51, IEC-60793-1-53, IEC-60793-1-52 IEC-60793-2-50, IEC-189	Test Methods for Optical Fibres
4.	EIA 359-A, 304(4), 216, 287 . IEC Publication	Colour Standards
5.	EIA 455-104	Test Method for Optical Fibre
6.	ISO 175, ISO 9073- (1,2,3),	International Quality Management System ISO 9001-2000
7.	FOTP-141, FOTP-123, FOTP-131, FOTP-89, FOTP-III.	Test Methods
8.	ITM-9, ASTM D-556, ASTM D-1248	Test Methods

PART I – TECHNICAL SPECIFICATION

1.0 Introduction :

This document describes the generic requirements of high count metal free Optical fibre Cables (ribbon type) for access network. The cable is meant to be installed underground. The fibres in the cable shall be arranged in a ribbon form. A ribbon shall have 12 fibres. Multiple ribbons shall be deployed in cable to meet capacity requirements.

2.0 Functional Requirement:

2.1 The design and construction of Ribbon Optical Fibre Cable shall be inherently robust and rigid under all conditions of operation, installation, adjustment, replacement, storage and transport.

2.2 The Ribbon optical fibre cable shall be able to work in a saline atmosphere in coastal areas and should be protected against corrosion.

2.3 Life of cable shall be at least 25 years. Necessary statistical calculations shall be submitted by the manufacturer, based upon life of the fibre and other component parts of the cable. The cable shall meet the cable aging test requirement.

2.4 It shall be possible to operate and handle the Ribbon optical fibre cable with tools as per GR No. G/OFT-01/02. APR 2006 and subsequent amendments, if any. If any special tool required for operating and handling the optical fibre cable, the same shall be provided along with the cable.

2.5 The High Count Metal Free Optical Fibre Cable (Ribbon Type) for Access Network shall be suitable and compatible with the dimensions, fixing, terminating and splicing arrangement of the splice closure supplied along with the cable & vice versa. The manufacturer shall indicate the type, make and the model no. of the splice closure to be supplied.

2.6 The manufacturer shall indicate the maximum and average splice loss of the Individual fibres in a ribbon with the permissible variation in sizes of the optical fibre ribbon during bulk production.

3.0 Technical Requirements:

Single Mode Optical Fibre used in Ribbon fibre cable shall be as per ITU-T Rec. G 652-D. The specification of optical fibres in a ribbon shall as mentioned below:

3.1	Type of fibre (Wavelength band optimized nominal 1310 nm)	:	Single mode (Section-I of the GR no.GR/ORM-01/03. MAR 04 and subsequent amendments, if any)

3.2 Geometrical Characteristics :

3.2.1	Nominal MFD for matched clad	: 8.8-9.8 µm
3.2.2	Nominal Cladding Diameter	: 125 µm ± 1.0 µm
3.2.3	Cladding Non-circularity	: ≤ 1%
3.2.4	Mode field concentricity error	: ≤ 0.8 µm
3.2.5	Diameter over primary coated with double UV cured acrylate. (Shall be measured on un-coloured fibre)	: 245 µm ± 10 µm

Note: The thickness of colour coating may be over and above the values specified above, if the manufacturer adopts separate UV cured colouring process (to colour the un coloured fibres) other than the on line integrated colouring process (of secondary layer of primary coating) of the fibres, during fibre manufacturing.

3.3 Transmission Characteristics :

3.3.1 Attenuation:

a) Fibre attenuation before Cabling

i) At 1310 nm	: ≤ 0.34 dB/km
ii) Between 1285 to 1360 nm	: ≤ 0.37 dB/Km
iii) Between 1480 to 1525 nm	: ≤ 0.34 dB/Km
iv) At 1550 nm	: ≤ 0.21 dB/Km
v) Between 1525 to 1625 nm	: ≤ 0.24 dB/Km

b) Water Peak Attenuation before cabling
Between 1360 – 1480 nm : ≤ 0.34 dB/Km

Note :

1. Attenuation in the band 1380 -1390 nm shall be checked at every 2 nm after Hydrogen ageing as per IEC 60793-2-50 (annexed). Hydrogen ageing test is to be carried out by CACT, Bangalore.
2. Sudden irregularity in attenuation shall be less than 0.1 dB
3. The spectral attenuation shall be measured on un-cabled fibre.
4. The Spectral attenuation in the 1250 nm–1625 nm band shall be measured at an interval of 10 nm and the test results shall be submitted.

c) Fibre attenuation after Cabling

i) At 1310 nm	: ≤ 0.36 dB/km
ii) At 1550 nm	: ≤ 0.23 dB/Km
iii) At 1625 nm	: ≤ 0.26 dB/Km

3.3.2 Dispersion :

a) Total Dispersion

i) In 1285-1330 nm band	: ≤ 3.5 ps/nm. km
ii) In 1270-1340 nm band	: ≤ 5.3 ps/nm. Km
iii) At 1550 nm.	: ≤ 18.0 ps/nm. Km

Note: The dispersion in the 1250 nm–1625 nm band shall be measured on un-cabled fibre at an interval of 10nm and the test results shall be submitted.

b) Polarization mode dispersion at 1310 nm & 1550 nm

i) Fibre	: ≤ 0.2 ps/√ km
ii) Cabled Fibre	: ≤ 0.3 ps/√ 'km

Note : Measurement on un-cabled fibre may be used to generate cabled fiber statistics and correlation established.

c) Zero Dispersion Slope : ≤ 0.092 ps/(nm^2.Km)

d) Zero dispersion wave length range : 1300 -1324 nm

3.3.3 Cut off wavelength of optical fibres : 1320 nm Max.

Note - The above cut off wavelength is w.r.t. 2M sample length of fibre.

3.4 Mechanical Characteristics :

3.4.1 Proof test for minimum strain level : 1 %

3.4.2 Stripability force to remove primary coating of the fibre. : $1.3 \leq F \leq 8.9$ N

Note : The force required to remove 30 mm ± 3 mm of the fibre coating shall not exceed 8.9 N and shall not be less than 1.3 N.

3.4.3 Dynamic Tensile Strength

a) Un-aged	: ≥ 550 KPSI (3.80 Gpa)
b) Aged	: ≥ 440 KPSI (3.00 Gpa)

3.4.4 Dynamic Fatigue (Test method IEC- 60793 - 1) : ≥ 20

3.4.5	Static Fatigue (Test method IEC- 60793 - 1)	: ≥ 20
3.4.6	Change in attenuation measured at 1550 nm when fibre is coiled with 100 turns on 30 ±1.0 mm radius mandrel	: ≤ 0.10 dB.
3.4.7	Fibre Curl (Test method as per IEC 60793-1)	: ≥ 4 meters radius of curvature
3.4.8	Fibre micro bend (1 turn-around 32 ±0.5 mm diameter mandrel)	: ≤ 0.5 dB at 1550 nm

3.5 **MATERIAL PROPERTIES :**

3.5 **MATERIAL PROPERTIES:**

3.5.1 **Fibre Materials:**

a) The substances of which the fibres are made : To be indicated by the manufacturer

b) Protective material requirement:

i) The physical and chemical properties of the material used for the fibre primary coating and for single jacket fibre. : It shall meet the requirement of fibre coating stripping force as per clause No. 3.4.2

ii) The best way of removing protective coating material. : To be indicated by the manufacturer

c) Group refractive Index of fibre : To be indicated by the manufacturer

Note: The manufacturer shall indicate the variation in group refractive index of fibre during bulk production

3.6 **Environmental Characteristic of Fibre :**

3.6.1 **Operating Temperature**
(Test Method IEC – 60793 – 1-52)

Temperature Dependence of Attenuation : - 60° C to +85° C
Induced Attenuation at 1550 nm at -60°C to +85° C : ≤ 0.05 dB/km

3.6.2 Temperature – Humidity Cycling
(Test method FOTP -73)

Induced Attenuation at 1550 nm at -10°C to +85°C and 95% relative humidity. : ≤ 0.05 dB/km

3.6.3 Water Immersion 23°C
(Test method IEC- 60793 – 1 - 53)

Induced Attenuation at 1550 nm due to Water Immersion at 23 ± 2°C : ≤ 0.05 dB/km

3.6.4 Accelerated Aging (Temperature) 85°C
(Test method IEC- 60793 – 1 – 51)

Induced Attenuation at 1550 nm due to Temperature Aging at 85° ± 2°C : ≤ 0.05 dB/km

3.6.5 Retention of Coating Color
(Test method IEC- 60793 – 1-51)

Coated Fiber shall show no discernible change in color, when aged for relative humidity : 30 days at 85°C with 95% Humidity and then 20 days in 85°C dry heat.

3.7 Colour Qualification and Primary coating Test :

3.7.1 Colour Qualification Test :

a) **MEK Rub Test (Methyle Ethyl Ketone Test) :**

To be tested by using soaked (Solvent) tissue paper for ten strokes unidirectional on 10 cm length of fibre. No colour traces to be observed on the tissue paper.

b) **Adhesion Test :**

To be tested by using soaked (Solvent) tissue paper for ten strokes unidirectional on 10 cm length of fibre.

c) **Water immersion Test (Type Test) :**

To be tested for coloured fiber for 30 days. After the test Colour qualification, Attenuation measurement & Strippability test are to be taken.

3.7.2 Primary coating Test :

a) **Fourier Transform Infrared Spectroscopy (FTIR) Test :**

To be tested to check the curing level of coating on the glass. The curing level shall be better than 90%.

3.8 Ribbon Structure :

3.8.1 Twelve primary coated fibres shall be arranged in ribbon structure. The fibres in the structure shall be parallel and shall not cross over each other along the entire length of the ribbon. The dimensions of 12 fibres ribbon shall be as per the Bell Core document no. GR-20-Core issue 2, July 1998 and as given below :

3.8.2 Ribbon Dimensions :

The maximum dimensions of fibre ribbon shall be as follows and the cross section geometry of the fibre ribbon shall be as shown in the following figure :

Number Of Fibres	Ribbon Width (W)	Ribbon height (H)	Extreme Fibres (B)	Planarity (P)
12	3220 µm	360 µm	2882 µm	50 µm

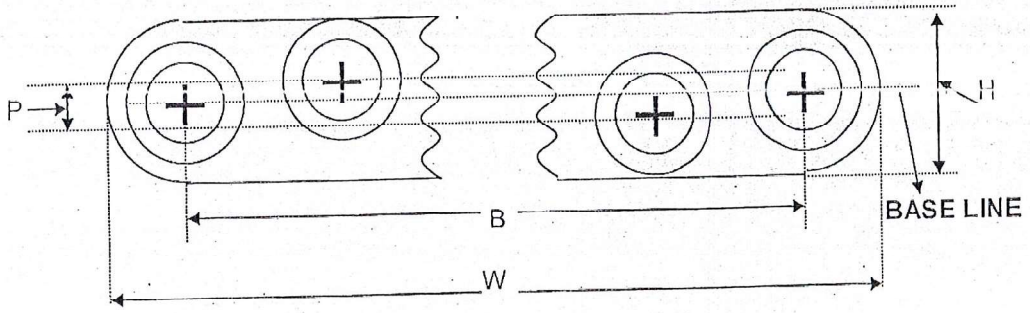

Cross section of Fibre Ribbon

3.8.3 Ribbon Material :

The ribbon shall be manufactured using single mode optical fibres coloured with UV cured resin and the ribbon shall be encapsulated with a further layer of UV cured acrylate. The fibres and the ribbons shall confirm to the colour requirement as per clause no. 4.4 of this GR.

3.8.4 Ribbon Mechanical Properties :

3.8.4.1 Ribbon Macro-bend

Change in attenuation when wrapped on a 60 mm diameter mandrel for 100 turns at 1310 & 1550 nm : ≤ 0.05 dB

3.8.4.2 Ribbon Compression Resistance

Change in attenuation when subjected to a compressive load of 500 N at 1310 nm & at 1550 nm) : ≤ 0.05 dB

3.8.4.3 Ribbon Torsion Resistance

Change in attenuation (At 1310 nm & 1550 nm) : ≤ 0.05 dB

3.9 **Ribbon Optical fibre Cable Construction Specifications:**

The cable shall be designed to the parameters mentioned in Annexure – I. The manufacturer shall submit designed calculation and the same shall be studied and checked.

3.9.1 Number of fibres in the cable : 48, 96, 144, 288, 576
(Type approval for a cable shall be issued depending upon the no. of fibres in the cable).

3.9.2 Number of fibres in a ribbon : Twelve (12) Fibres

3.9.3 The number of ribbons per loose tube in ribbon optical fibre cable shall be as follows :

S. No	No. of Fibres	Multi loose tube type
a.	48 fibres	Four Tube, 1 ribbon per tube
b.	96 fibres	Five tubes, Two tubes with 1 ribbon per tube Three tubes with 2 ribbons per tube
c.	144 fibres	Six tubes, Two ribbons per tube
d.	288 fibres	Six tubes, Four ribbons per tube
e.	576 fibres	Eight tubes, Six ribbons per tube

TYPICAL STRUCTURAL DRAWING FOR 48F RIBBON OPTICAL FIBRE CABLE

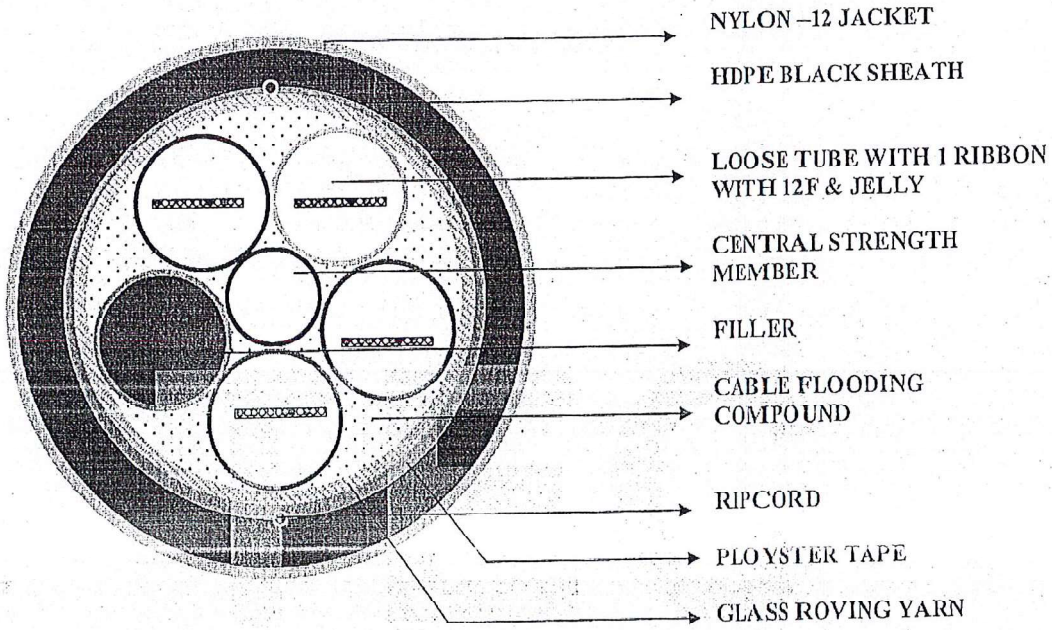

3.9.4 **Strength Member :** Solid FRP non - metallic strength member shall be used in the center of the cable core. The strength member in the cable shall be for strength and flexibility of the cable and shall have anti buckling properties. The FRP shall keep the fibre strain within permissible values.

3.9.5 **Cable Core Assembly :** Primary coated fibres in ribbon structure shall be protected inside loose tubes / buffer tubes which are stranded together around a central strength member using helical or reverse lay techniques and form the cable core. The buffer tubes shall maintain the fibre's mechanical & optical integrity. It shall also protect them from tensile, thermal and vibration loads. The buffer tubes shall be gel filled to block the ingress of water.

3.9.6 **Core Wrapping :** The main cable core containing ribbons in tubes shall be wrapped by a layer(s) of Polyester foil/ tape. The nylon/polyester binder thread / tape shall be used to hold the thread / tape, if required.

3.9.7 **Moisture barrier (protection):** The main cable core (containing fibres & core wrapping) shall be protected by flooding compound (Jelly) having properties of non hygroscopic dielectric material.

3.9.8 **Filling compound:** The filling compound used in the loose tube and in the cable core shall be compatible to fibre, secondary protection of fibre, core wrapping etc. The drip point shall not be lower than +70 degree C. The fibre movement shall not be constrained by stickiness and shall be removable easily for splicing. The test method to measure drop point shall be as per ASTM D 556. The filling and the flooding jelly compound shall be as per the Raw Material GR No. G/ORM – 01/ 03.MAR 04 and subsequent amendments, if any.

3.9.9 **Sheath :** A non-metallic moisture barrier sheath may be applied over and above the cable core. The core shall be covered with tough weather resistant High Density Polyethylene (HDPE) sheath, black in colour (UV Stabilized). The colour shall conform to Munsell Colour Standards. Thickness of the sheath shall be uniform and shall not be less than 1.8 mm including the strength members if used in the sheath. The sheath shall be circular, smooth, free from pin holes, joints, mended pieces and other defects. Reference test method to measure thickness shall be as per IEC 189 Para 2.2.1 and Para 2.2.2.

Note: In case black colour HDPE material is used, the material from finished product shall also be subjected to following tests (on sample basis):

a) Density.
b) Melt Flow Index.
c) Carbon Black Content.
d) Carbon Black Dispersion.
e) ESCR.
f) Moisture Content
g) Tensile Strength and Elongation at break

3.9.10 **Outer Jacket :** A circular sheath/Jacket of not less than 0.65 mm thick of Polamide-12/Nylon–12 material (orange colour), free from pin holes, scratches and other defects etc., shall be provided over and above the HDPE sheath. The nylon Jacket shall have smooth finish.

3.9.11 **Cable diameter :** The finished cable diameter shall be as per Annexure-I.

3.9.12 **RIP Cord :**

a) Two suitable rip cords shall be provided in the cable which shall be used to open the HDPE sheath of the cable. The rip cords shall be placed diametrically opposite to each other. It shall be capable of consistently slitting the sheath without breaking for a length of 1 meter at the installation temperature. The rip cords (3 ply & twisted) shall be properly waxed to avoid wicking action and shall not work as a water carrier.

b) The rip cord used in the cable shall be readily distinguishable from any other components (e.g. Aramid Yarn etc.) utilized in the cable construction.

3.10 Mechanical Characteristics and Tests on Optical Fibre Cable :

3.10.1 Tensile Strength Test :

Objective : This measuring method applies to optical fibre cables which are tested at a particular tensile strength in order to examine the behavior of the attenuation as a function of the load on a cable which may occur during installation.

Method : IEC 60794-1-2-E1.

Test Specs.: The cable shall have sufficient strength to withstand a load of value T(N) = 9.81 x 2.5 W Newtons or 10000 N which ever is lower (where W-mass of 1Km of cable in Kg). The load shall be sustained for 10 minutes and the strain on the fibre and the attenuation shall be monitored.

Requirement : The load shall not produce a strain exceeding 0.25 % in the fibre and shall not cause any permanent physical and optical damage to any component of the cable. The attenuation shall be noted before strain and after the release of strain. The change in attenuation of each fibre after the test shall be $\leq$ 0.05 dB, both for 1310 nm and 1550 nm wavelength.

3.10.2 Abrasion Test :

Objective : To test the abrasion resistance of the sheath and the marking printed on the surface of the cable.

Method : IEC-60794-1-2-E2 or by any other international test method.

The cable surface shall be abraded with needle (wt. 150 gm) having diameter of 1 mm with 500 grams weight (Total weight more than equal to 650 gms.).

No. of cycles	:	100
Duration	:	One minute (Nominal)

Requirement : There shall be no perforation and loss of legibility of the marking on the sheath.

3.10.3 Crush Test (Compressive Test) :

Objective : The purpose of this test is to determine the ability of an optical fibre cable to withstand crushing.

Method : IEC 60794-1-2-E3.

Test Specs. :The fibres and component parts of the cable shall not suffer permanent damage when subjected to a compressive load of 2000 Newtons applied, between the plates of dimension 100 mm x 100 mm. The load shall be applied for 60 seconds. The attenuation shall be noted before and after the completion of the test.

Requirement : The change in attenuation of the fibre after the test shall be ≤ 0.05 dB, both for 1310 nm and 1550 nm wavelength.

3.10.4 Impact Test:

Object : The purpose of this test is to determine the ability of an optical fibre cable to withstand impact.

Method : IEC 60794-1-2-E4.

Test Specs : The cable shall have sufficient strength to withstand an impact caused by a mass weight of 50 Newtons, when falls freely from a height of 0.5 meters. The radius R of the surface causing impact shall be 300 mm. Ten such impacts shall be applied at the same place. The attenuation shall be noted before and after the completion of the test.

Requirement: The change in attenuation of the fibre after the test shall be ≤0.05 dB, both for 1310 nm and 1550 nm wavelength.

3.10.5 Repeated Bending :

Objective : The purpose of this test is to determine the ability of an optical fibre cable to withstand repeated bending.

Method : EIA-455-104.

Test Specs. : The cable sample shall be of sufficient length (5 m minimum) to permit radiant power measurements as required by this test. Longer lengths may be used, if required.

Test Parameters:

Weight	: 5 Kg
Minimum distance from Pulley centre to holding device	: 216 mm
Minimum distance from Wt. to Pulley centre	: 457 mm
Pulley Diameter (D – cable diameter)	: 20 D
Angle of Turning	: 90°
No. of cycles	: 30
Time Required for 30 cycles	: 2 min

Requirement : During the test no fibre shall break and the attenuation shall be noted before and after the completion of the test. The change in attenuation of the fibre after the test shall be $\leq$ 0.05 dB, both for 1310 nm and 1550 nm wavelength.

3.10.6 Torsion Test:

Object : The purpose of this test is to determine the ability of an optical fibre cable to withstand torsion.

Method : IEC 60794-1-2-E7.

Test Specs. : The length of the specimen under test shall be 2 meters and the load shall be 100 N. The sample shall be mounted in the test apparatus with cable clamped in the fixed clamp, sufficiently tight, to prevent the movement of cable sheath during the test. One end of the cable shall be fixed to the rotating clamp, which shall be rotated in a clockwise direction for one turn. The sample shall then be returned to the starting position and then rotated in an anti-clockwise direction for one turn and returned to the starting position. This complete movement constitutes one cycle. The cable shall withstand ten such complete cycles. The attenuation shall be noted before and after the completion of the test.

Requirement: The cable shall be examined physically for any cracks, tearing on the outer sheath and for the damage to other component parts of the cable. The twist mark shall not be taken as damage. The change in attenuation of the fibre after the test shall be $\leq$ 0.05 dB, both for 1310 nm and 1550 nm wavelength.

3.10.7 Kink Test :

Object: The purpose of this test is to verify whether kinking of an optical fibre cable results in breakage of any fibre, when a loop is formed of dimension small enough to induce a kink on the sheath.

Method : IEC 60794-1-2-E10.

Test Specs. : The sample length shall be 10 times the minimum bending radius of the cable. The sample is held in both hands. a loop is made of a bigger diameter and by stretching both the ends of the cable in opposite direction, the loop is made to the minimum bend radius, and no kink shall form the cable is then normalized and attenuation reading is taken.

Requirement : The kink should disappear after the cable is made normal. The change in attenuation of the fibre after test shall be $\leq$ 0.05 dB, both for 1310 nm & 1550 nm wavelength.

3.10.8 Cable Bend Test:

Objective : The purpose of this test is to determine the ability of an optical fibre cable to withstand repeated flexing. The procedure is designed to measure optical transmittance changes and requires an assessment of any damage occurring to other cable components.

Method : IEC 794-1-2-E11 (Procedure-I).

Test Specs. : The fibre and the component parts of the cable shall not suffer permanent damage when the cable is repeatedly wrapped and unwrapped 4 complete turns of 10 complete cycles around a mandrel of 20 D, where D is the diameter of the cable. The attenuation shall be noted before and after the completion of the test.

Requirement : The change in attenuation of the fibre after the test shall be $\leq$ 0.05 dB, both for 1310 nm and 1550 nm wavelength. Sheath shall not show any cracks visible to the naked eye, when examined whilst still wrapped on the mandrel.

3.10.9 Test of Figure of 8 (Eight) on the cable (Type Test):

Objective : Check of easiness in formation of figure of 8 of the cable during installation in the field.

Test Method : 1000 meter (approximate) of the cable shall be uncoiled from the cable reel and shall be arranged in figure of 8 (eight). The diameter of each loop of the figure of 8 shall be maximum 2 meters.

Requirement : It shall be possible to make figure of 8 of minimum 1000 meter length of the cable uncoiled from the cable reel, without any difficulty. No visible damage shall occur.

3.10.10 Temperature Cycling (Type Test) :

Objective : To determine the stability behavior of the attenuation of a cable subjected to temperature changes, which may occur during storage, transportation and usage.

Method : IEC 60794-1-2-F1 (To be tested on Standard cable length of drum i.e. 2 Km $\pm$ 5 %).

Test Specs. : The permissible temperature range for storage and operation will be from -20°C to +70°C. The rate of change of temperature during the test shall be 1° per minute approx. The cable shall be subjected to temperature cycling for 12 Hrs. at each temperature as given below :

TA2 temp. : - 20°C.
TA1 temp. : - 10°C.
TB1 temp. : + 60°C.
TB2 temp. : + 70°C.

The test shall be conducted for 2 cycles at the above temperatures.

Requirement : The change in attenuation of the fibre under test shall be $\leq$0.05 dB, for 1310 nm and 1550 nm wave length for the entire range of temperature.

3.10.11 Cable Aging test (Type Test):

Objective : To check the cable material change dimensionally as the cable ages.

Method : At the completion of temperature cycle test, the test cable shall be exposed to 85 $\pm$ 2 degree C for 168 hours. The attenuation measurement at 1310 nm & 1550 nm wave length to be made after stabilization of the test cable at ambient temperature for 24 hours.

Requirement : The increase in attenuation allowed is $\leq$ 0.05 dB at 1310 nm & 1550 nm

Note : The attenuation changes are to be calculated with respect to the base line attenuation values measured at room temperature before temperature cycling.

3.10.12 Water Penetration Test (Type Test):

Objective : To check the installed cable shall not allow the water passage along its length.

Method : IEC 794-1-2-F5 (Fig. B) 1992.

Test Specs.: A circumferential portion of the cable end (with HDPE sheath, after removing the nylon jacket) shall face the water head. The water tight sleeve shall be applied over the cable. The cable shall be supported horizontally and two meter water head, containing sufficient quantity of water soluble fluorescent dye for the detection of seepage, shall be applied on the HDPE sheath for a period of seven days, at ambient temperature. No other colored dye is permitted.

Requirement : No dye shall be detected when the end of the 3 m length of the cable is examined with ultraviolet light detector. The cable sample under test shall be ripped open after the test and it shall be examined for seepage of water into the cable and the distance to be noted. It shall not be > 20 cm.

3.10.13 Cable Jacket Yield Strength And Ultimate Elongation :

Objective: To check the yield strength and elongation of polyethylene (HDPE) cable sheath.

Test Method : FOTP-89 or ASTM D1248 Type III Class.

Test Condition :

1) Sample shall be taken from a completed cable (The nylon to be removed for this test). The aged sample shall be conditioned at 100 $\pm$ 2^0 C for 120 hours before testing.

2) The cross-head speed shall be 50 mm per minute.

Requirement :

Jacket Material	Minimum Yield Strength		Minimum Elongation (%)
	(MPa)	(psi)	
HDPE un-aged	16.5	2400	400
HDPE aged	12.4	1800	375

3.10.14 Ribbon Dimension Measurements test:

Objective: Check of fibres in ribbon structure and to ensure the transmission performance and the mechanical service life of the fibre in the ribbon structure and the check of cross over fibres and the check of fibre identity.

Test method : FOTP-123 (Video Gray Scale Analysis (VGSA) or Microscopic method).

Requirement: It shall meet the dimensional requirements given in clause no. 3.8.2 of this GR. The fibres in the entire length of the ribbon shall not cross over at any point.

3.10.15 Ribbon Resistance to Twist (Robustness) test:

Objective : To check the robustness of the fibre ribbons to withstand the twist in installed conditions and to check the structural integrity of the ribbon over the deployed length for mid-span entry, maintenance purposes, consideration in rearrangements and house keeping.

Test method : FOTP-141.

Requirement : The un-aged and aged (at 85 ± 2 degree C with uncontrolled humidity for a period of 30 days) completed ribbon shall not show any separation of individual fibres from the ribbon structure after completion of the twist test when observed under 5X magnification.

3.10.16 Ribbon Residual Twist (Flatness) test :

Objective : To check the dimensional integrity of the ribbon without twisting to allow rearrangements and to limit the potential attenuation increases due to a macro-bending caused by twisting of the fibre ribbon.

Test Method : FOTP-131.

Requirement : The aged (at 85° ± 2° C with uncontrolled humidity for a period of 30 days) ribbon residual twist (if any) shall have a pitch : ≥ 400 mm.

3.10.17 Ribbon Separation Test :

Objective :

a) To check the separation of individual fibres, separation of sub-unit of fibres and mid span separation from a fibre ribbon.

b) To check the retention of sufficient colorant for identification for any 2.5 cm length of fibre after separation for individual and sub-unit of fibres..

Test to be conducted for :

a) Separation of any single fibre or a multi-fibre subgroup by a tool or by hand from a ribbon for a length of 1 meter. Mid span separation from a 2 meter sample, separated close to middle for at least 0.5 meter (both single fibre and the six fibre sub – units) for un-aged ribbon.

   Requirement : The un-aged ribbon of minimum length of a 0.3 meter (1.0 foot) of an individual fibre and a sub group of six fibres shall be separated from the ribbon without breaking the fibres or damaging the fibre coating. The force required to perform separation shall not exceed 4.4 N. The area at the separation shall not show any damage to the fibre coating when examined under 5X magnification.

b) Retention of the Colour and Fibre Identification after separation.

   Requirement : Individual fibre colour identification shall be maintained after the separation test. It shall retain sufficient colorant that any 2.5 cm length is readily identifiable.

c) Removal of Ribbon matrix material to access individual fibres.

Requirement : No damage shall occur either to fibre coating or the fibres. The coating shall not sustain any swelling self-stripping, cracking or splitting when examined under 5X magnification.

Note: The manufacturer shall recommend the procedure for the removal of ribbon matrix.

3.10.18 Ribbon Stripability Test :

Objective : Check of removal of the matrix material and the fibres protective coating mechanically with commercial stripping tools from un-aged and aged ribbons.

Test Method : ITM-9 (Bell Core GR-20-CORE issue 2, July 1998)

Pre Conditioning:

a. **Aged samples :** The humidity of aged ribbons shall be soaked at 85 ± 2 degree C and a non-condensing humidity of 85 ± 5% for a period of 30 days.

b. **Water aged samples:** The water aged ribbons shall be soaked in de-ionized or distilled water at a temperature of 23 ± 5 degree for a period of 14 days.

The fibre ribbon strip-ability testing shall be conducted at standard atmospheric conditions. The un-aged, humidity – aged, and water aged ribbons shall be tested within eight hours after aging.

Requirement : There shall be no fibre breakage, and any coating residue shall be removable with a single isopropyl alcohol wipe when at least 25 mm of the matrix material and the fibre Protective coating is mechanically removed with commercial stripling tools from un-aged and aged ribbons.

3.10.19 Ribbon Macro-bend Performance

Objective : To check the macro-bend performance of a ribbon.

Method : One hundred turns of ribbon are wound around a 60 mm diameter ribbon and the loss increase at 1310 nm & 1550 nm shall be measured.

Requirement : The change in attenuation of the fibre shall be ≤ 0.05 dB, for 1310 nm and 1550 nm wave lengths

3.10.20 Torsion Resistance of the ribbon test :

Objective : To check the torsion resistance of the ribbon.

Method : One meter length of ribbon is twisted to through five revolutions of 360° and measurement is taken.

Requirement: The change in attenuation of the fibre shall be $\leq$ 0.05 dB, for 1310 nm and 1550 nm wave lengths.

3.10.21 Crush Resistance of Ribbon :

Objective : To check the crush resistance of the ribbon.

Method: A 50 mm^2 sample is subjected to a load of 500 N and the attenuation measurement taken for both 1310 nm & 1550 nm wave lengths.

Requirement : The change in attenuation of the fibre shall be $\leq$ 0.05 dB, for 1310 nm and 1550 nm wave lengths.

3.10.22 Check of the quality of the loose tube (containing optical fibre ribbon) (Type Test) :

A. **Embrittlement Test of Loose Tube**

This test method is based on bending by compression and reflects embrittlement much better than the other tensile tests. This test is independent of wall thickness of the loose tube.

Sample: The minimum length of the test sample depends on the outside diameter of the loose tube and should be 85 mm for tubes up to 2.5 mm outside dia. The length of the bigger tubes should be calculated by using the following equation:

$$Lo > 100 \times \frac{\sqrt{(D^2 + d^2)}}{4}$$

Where Lo = Length of tube under test.
D = Outside dia of loose tube.
d = Inside dia of loose tube.

Example :

Fibre optic tube, D = 4 mm, d = 3 mm

$$L0 > 100 \times \frac{\sqrt{(5^2 + 3^2)}}{4}$$

$> 100 \times 5.83 / 4 = 145.8$

Procedure: Both the ends of a buffer tube test sample may be mounted in a tool, which is clamped in jaws of a tensile machine which exerts a constant rate of movement. The movable jaw may move at a rate of 50 mm per minute toward the fixed jaw. Under load, the tube will bend so that it is subjected to tensile and compressive stresses. The fixture for holding the tube should be designed in a manner that the tube might bend in all directions without further loading.

Requirement : The tube should not get embrittled. No kink should appear on the tube up to the safe bend diameter of tube (15 D), where D is the outside diameter of the loose tube. There should also not be any physical damage or mark on the tube surface.

B. **Kink Resistance Test on the Loose Tube**

To safeguard the delicate optical fibres, the quality of the loose tube material should be such that no kink or damage to the tube occur while it is being handled during installation and in splicing operations.

To check the kink resistance of the loose tube, a longer length of the loose tube is taken (with fibre and gel), a loop is made and loop is reduced to the minimum bend radius of loose tube i.e. 15 D (where D is the out side diameter of the loose tube). This test is to be repeated 4 times on the same sample length of the loose tube.

Requirement : No damage or kink should appear on the surface of the tube.

3.10.23 Drainage Test for loose Tube (Type Test):

Sample Size : 30 cm tube length.

Test procedure :

a) Cut the tube length to 40 cm.

b) Fill the tube with the tube filling gel ensuring that there are no air bubbles and the tube is completely full.

c) Place the filled tube in a horizontal position on a clean worktop and cut 5 cm from either end so that the finished length of the sample is 30 cm.

d) Leave the filled tube in a horizontal position at an ambient temperature for 24 hrs.

e) The sample tube is then suspended vertically in an environment heat oven over a weighed beaker. It is left in the oven at a temperature of 70° C for a period of 24 Hrs.

f) At the end of the 24 hrs period the beaker is checked and weighed to see if there is any gel in the beaker.

Requirement :

a. If there is no gel or oil in the beaker the tube has PASSED the drainage test.
b. If there is gel or oil in the beaker the tube has FAILED the drainage test.

3.10.24 Check of easy removal of sheath:

Objective: Check of the easy removal of sheath of the optical fibre cable by using normal sheath removal tool.

Procedure: To check easy removal, the sheath shall be cut in circular way and the about 300 mm length of the sheath should be removed in one operation. It should be observed during sheath removal process that no undue extra force is applied and no component part of the cable is damaged. One should be able to remove the sheath easily.

Note : - Easy removal of both the outer jacket and the inner sheath shall be checked separately.

3.10.25 Check of the effect of aggressive media on the cable (Type Test):

Procedure: To check the effect of aggressive media, solution of PH4 and PH10 shall be made. The two test samples of the finished cable, each of 600 mm in length, are taken and the ends of the samples are sealed. These test samples are put in the PH4 and PH10 solutions separately. After 30 days these samples are taken out from the solutions and examined for any corrosion etc on the sheath and other markings of the cables. (Test method no. ISO175).

Requirement : The sample should not show any effect of these solution on the sheath and other marking of the cable.

PART II – GENERAL REQUIREMENTS:

4.0 Engineering requirements:

4.1 Cable Marking :

4.1.1 A long lasting suitable marking shall be applied in order to identify this cable from other cables. The cable marking shall be imprinted (indented). The marking on the cable shall be indelible of durable quality and at regular intervals of one meter length. The accuracy of the sequential marking must be within -0.25% to +0.5% of the actual measured length. The markings on the cable must not rub off during normal installation and in life time of optical fibre cable.

4.1.2 The marking shall be in black colour over the orange colour nylon jacket and shall be done by hot foil indentation method. It must clearly contrast with the surface. The colour used must withstand the environmental influences experienced in the field.

4.1.3 The type of legend marking on O.F. cable shall be as follows :

a) Company Legend
b) Legend containing telephone mark & international acceptable Laser symbol
c) Type of cable "Ribbon Loose Tube".
d) Type of Fibres
e) Number of Fibres
f) Year of manufacture
g) Sequential length marking
h) User's identification i.e. BSNL or MTNL
i) Cable ID

4.2 Cable Ends:

4.2.1 Both cable ends (the beginning end and end of the cable reel) shall be sealed and readily accessible. Minimum 5 meter of the cable of the beginning end of the reel shall be accessible for testing. Both ends of the cable shall be kept inside the drums and shall be located so as to be easily accessible for the test. The drum (conforming to GR No. G/CBD-01/02. NOV 94 and subsequent amendments issued, if any) should be marked to identify the direction of rotation of the drum. Both ends of cable shall be provided with cable pulling (grip) stocking and the anti twist device (free head hook). The diameter of the cable shall also be marked on the cable drum. The wooden drum shall be properly treated against termites and other insects during transportation and storage. The manufacturer shall submit the methodology used for the same.

4.2.2 An anti-twist device (Free head hook) shall be provided attached to the front end of the cable pulling arrangement. The arrangement of the pulling eye and its coupling system, along with the anti twist system, shall withstand the prescribed tensile load applicable to the cable.

4.3 The nominal drum length:

4.3.1 Length of OF Cable in each drum shall be 2 Km ± 5 % / 4Km ± 5% and shall be supplied as per the order. The variation in length of optical fibre cable, as specified above (in each drum), shall be acceptable.

4.3.2 The fibres in cable length shall not have any joint.

4.3.3 The drum shall be marked with arrows to indicate the direction of rotation.

4.3.4 Packing list supplied with each drum shall have at least the following information:

a) Drum No.
b) Type of cable
c) Physical Cable length
d) No. of fibres
e) Length of each fibre as measured by OTDR
f) The Cable factor - ratio of fibre / cable length
g) Attenuation per Km. of each fibre at 1310 nm & 1550 nm
h) User's / Consignee's Name
i) Manufacturer's Name, Month, Year and Batch No.
j) Group refractive index of fibres
k) Purchase Order No
l) Cable ID

4.4 Colour coding and Ribbon identification in O.F. Cables :

4.4.1 The colorant applied to individual fibres shall be readily identifiable throughout the life time of the cable and shall match and conform to the MUNSELL color standards.(For EIA standard EIA-359-A) or IEC Publication 304 (4).

4.4.2 Colour Coding Scheme :

When the loose tubes are placed in circular format, the marking to indicate the loose tube no. "1" shall be in blue colour followed by loose tube no.2 of orange and so on for other tubes as per the colour scheme given below and complete the circular format by placing the dummy /fillers at the end.

Depending upon the number of fibres in a Ribbon (which depends on the cable capacity), the colour of the fibres are serially chosen from the column no. II of the following table.

Table-1 : Colour Coding scheme of the Optical Fibres & Loose tube

No.of Fiber I	Fiber identification II	Loose tube identification III
1	Blue	Blue
2	Orange	Orange
3	Green	Green
4	Brown	Brown
5	Slate/Grey	Slate/Grey
6	White (Milky white)	White (Milky white)
7	Red	Red
8	Black	Black
9	Yellow	Yellow
10	Violet	Violet
11	Rose/Pink	Rose/Pink
12	Aqua	Aqua

4.4.3 Identification of Ribbon :

No. of fibres in a cable	No. of Tubes	No. of Ribbons per Tube	Marking on Ribbon
48Fibres	Four	One	1 RIBBON 1
96 Fibres	Five	2 tubes with 1 ribbon per tube 3 tubes with 2 ribbon per tube	1 RIBBON 1 1 RIBBON 1 2 RIBBON 2
144 Fibres	Six	Two	1 RIBBON 1 2 RIBBON 2
288 Fibres	Six	Four	1 RIBBON 1 2 RIBBON 2 3 RIBBON 3 4 RIBBON 4
576 Fibres	Eight	Six	1 RIBBON 1 2 RIBBON 2 3 RIBBON 3 4 RIBBON 4 5 RIBBON 5 6 RIBBON 6

Note :

1. In case of 96 Fibre cable, Loose tube No. 1 & 2 shall have 1 ribbon per tube and Loose tube No. 3, 4 & 5 shall have 2 ribbons per tube.

2. The printing shall be at regular interval of every 200 mm on natural color ribbon and shall be legible. The printing on the ribbon shall also be of durable quality and shall be compatible with coating of the ribbon and Thixotropic Jelly (filled in the loose tube of the cable).

Color coding of Loose tubes for 4 Ribbons (48 fibres) (Refer Table-1)

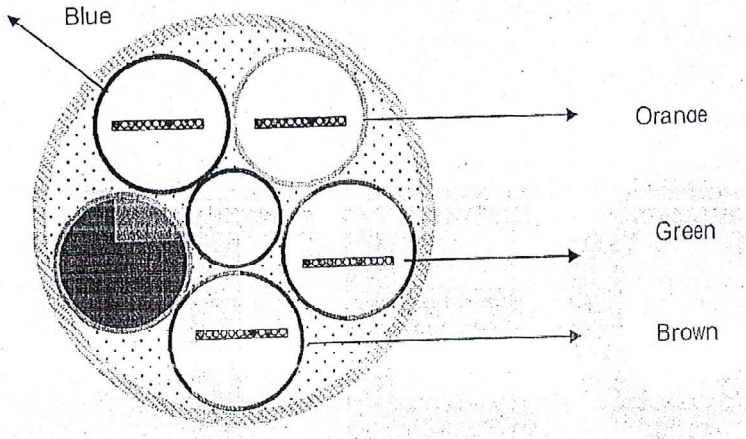

(Loose Tube Colour: Blue, Orange, Green and Brown)

5.0 **Quality Requirements :**

5.1 The cable shall be manufactured in accordance with the international quality standards ISO 9001-2000 series of standards for which the manufacturer should be duly accredited. A quality plan followed by the manufacturer shall be required to be submitted.

5.2 **Raw Material:**

5.2.1 The cable shall use the raw materials approved against the GR No. G/ORM-01/03. MAR 04 and the subsequent amendments issued, if any.

5.2.2 The material used, other than approved materials, shall be clearly indicated by the manufacturer. The detailed technical specifications of such raw materials used shall be furnished by the manufacturer at the time of Type Approval.

5.2.3 The raw materials used from multiple sources is permitted and the source / sources of raw materials from where these have been procured shall be submitted by the manufacturer .

5.2.4 The manufacturer can change the raw material from one approved source to other approved source with the approval of QA, BSNL. The change of source/grade of SM Optical Fibre / Ribbon and / or design shall call for fresh type approval.

5.2.5 The HDPE, Black in colour, used for sheath shall be UV stabilized.

Note: Test certificate from a recognized laboratory or institute may be acceptable for UV stability test of the HDPE sheath material.

5.2.6 The material used in optical fibre cable must not evolve hydrogen that will affect the fibre loss.

Note: Test certificate from a recognized laboratory or institute may be acceptable.

5.3 Cable Material Compatibility:

Optical fibre, buffers/core tubes, and other core components shall meet the requirements of the compatibility with buffer/core tube filling material(s) and/or water-blocking materials that are in direct contact with identified components within the cable structure as per clause no. 6.3.4 of GR-20-CORE issue 2, July 1998.

Note : The tests may be conducted in house (if facility exist) or may be conducted at CACT or any other recognized laboratory. The test certificate may be accepted and the tests may not be repeated subsequently, in next type approvals, if the raw material used is of same make and grade.

6.0 Documentation:

6.1 Complete technical literature in English with detailed cable construction diagram of various sub-components with dimensions, weight & test data and other details of the cable shall be provided.

6.2 All aspects of cable installation, operation, maintenance and fibre splicing shall also be covered in the handbook. A hard as well as soft copy of the manuals shall be provided.

7.0 Safety Requirement:

The material used in the manufacturing of the High count Metal free optical fibre cable (ribbon type) shall be non toxic and dermatologically safe in its life time and shall not be hazardous to health. The manufacturer shall submit MSDS (Material safety Data Sheet) for all the material used in manufacturing of optical fibre cable to substantiate the statement. 60793-2 © IEC: 1998+ A 1: 2001

Annex B
(Informative)

Hydrogen ageing

Technical note: This test is under consideration and evaluation for category B 1.3 fibres. It is not intended for specification of other fibre categories.

Select a fibre specimen at least 1 km long. After spooling the fibre to a test configuration that minimises the effect of winding on attenuation at λ_y nm, measure the attenuation coefficient of the specimen at 1240 nm and at λ_y nm. This measurement gives the baseline attenuation for the specimen. Expose the fibre to 0.01 atmospheres of hydrogen at room temperature. During this exposure, monitor the attenuation coefficient of the specimen at 1240 nm. This wavelength is indicative of the molecular hydrogen present in the specimen. Constructing the change in attenuation as the monitored results minus the baseline value, continue exposure until the 1240 nm attenuation changes by $\geq$ 0. 03 dB/km. At this time, the attenuation increase at λ_y may be considered fully saturated, and the specimen may be removed from the hydrogen atmosphere. After at least 14 days in the normal laboratory environment, measure the attenuation coefficient of the fibre at λ_y using methods A, B or C of IEC 60793-1-40.

NOTE 1 This is a type test performed periodically to ensure that the manufacturing process reliably yields fibre with acceptable ageing characteristics. For example, 10 fibre samples may be tested every six months.

NOTE 2 This test is not appropriate for hermetically coated fibre.

NOTE 3 For non-hermetic fibres, typical hydrogen exposure time is from four to six days.

Procedures for the issue of Type Approvals/TSEC of High count Metal Free Optical Fibre Cables (Ribbon Type) for Access Network against GR No. GR/OFC-05/02. MAR 2006

Manufactures having valid TAC/TSEC for higher fibre count of Ribbon optical fibre cables can seek approval for lower fibre count of Ribbon optical fibre cables against this GR, without conducting the actual tests, as per the following:

i) The manufacturer may seek Type Approval/TSEC of Ribbon Type Metal Free Optical Fibre Cables against GR No. GR/OFC-05/02. MAR 2006 for the respective fibre count of 48, 96, 144, 288 or 576 fibres.

ii) The Ribbon Type Metal Free Optical Fibre Cables against GR (No. GR/OFC-05/02. MAR 2006) are grouped into following four groups :

   a) Group No. I Fibre cables of 576, 288, 144, 96 & 48 Fibres.

   b) Group No. II Fibre cables of 288, 144, 96 & 48 Fibres.

   c) Group No. III Fibre cables of 144, 96 & 48 Fibres.

   d) Group No. IV Fibre cables of 96 & 48 Fibres.

iii) The manufacturer may seek Type Approval/TSEC of **Lower Fibre Count Cable,** mentioned in the respective group, if he has TAC/TSEC for higher fibre count cable in the particular group.

iv) The manufacturer seeking Type Approval/TSEC for the **Lower Fibre Count Cable,** based upon the fact that he is having TAC/TSEC for higher fibre count cable, shall be required to submit the following :

   1) Application in prescribed forms as per the existing Type Approva/TSEC Procedures.

   2) Compliance statement against each clause of the GR, along with construction design details with dimensions.

   3) The manufacturer shall have manufactured at least 3 cable reels (of 2 km each approx.) of the particular fibre count of the cable for which application for the issue of TAC/TSEC is made. The sample of the cable shall be submitted by the manufacturer at the time of seeking TAC/TSEC of lower fibre count of cable.

4) A separate application is required to be submitted for the issue of TAC/TSEC for each type of **lower fibre count** of cable.

5) The manufacturer shall submit the actual test results (of the manufactured cable) against each clause of the GR (and as per the requirement of the latest test schedule applicable to the GR). Mere mentioning the word **"Complied"** shall not be accepted.

6) The list of **Raw Materials** used, the make and grade of the raw material and the certificate of source approval issued by CACT along with the details of the Raw Materials used in the manufacturing of the higher fibre count OF cable for which he is holding valid TAC/TSEC. Both the raw materials shall be compared and are required to be of same make and grade.

Additional required information from the manufacturer may be sought (regarding manufactured OF cable) and the manufactured cable may be inspected at the manufacturer's premises. After all the above requirements are met, the TAC/TSEC may be issued to the lower fibre count of the cable, in the respective group, based upon the test results and other details submitted by the manufacturer.

The tariff in each case is fixed as category – II. The first such case may be referred to HQ group for study and any change in the procedure required, if any.

The following shall be mentioned in the Remarks column of the TAC/TSEC while it is issued for the lower fibre count of the cable :

``This TAC/TSEC is issued on the basis of TAC/TSEC No. _____ dated _____ for _____ fibre count cables.

The validity of the TAC/TSEC for Lower Fibre Count Cables shall be restricted to the validity of TAC/TSEC of higher fibre count cables.

The above procedure shall be applicable only to the approval of Ribbon Type Metal Free Optical Fibre Cables against the GR No. GR/OFC-05/02. MAR 2006 and subsequent amendments, if any.

ANNEXURE –I

The following parameters of the component parts of the cable are to be taken into account while designing and manufacturing the optical fiber cables of the required fiber count. These parameters shall be checked during evaluation of the OF Cables.

SN	Parameter	Unit	48 Fiber OF Cable	96 Fiber OF Cable	144 Fiber OF Cable	288 Fiber OF Cable	576 Fiber OF Cable
1	FRP Rod EAA coated	mm	3.5+0.1/-0.0	3.5+0.1/-0.0	3.5+0.1/-0.0	3.5+0.1/-0.0	3.5+0.1/-0.0
2	FRP up jacketing thickness	mm	0	0	0.7	1.5	3.8
3	Tube ID (min)	mm	3.9	3.9	3.9	5.1	5.4
4	Tube OD	mm	5.0 ±0.1	5.0 ± 0.1	5.0 ± 0.1	6.4 ±0.1	6.7 ±0.1
5	No. of Ribbons / tube	No	1	2 tubes with 1 ribbon/tube and 3 tubes with 2 ribbon/tube	2	4	6
6	No of loose tubes	No	4	5	6	6	8
7	No of dummy	No	1	0	0	6 thin dummies in the interstices	8 thin dummies in the interstices
8	Tube stranding lay over length	mm	>200	>200	>200	>300	>300
9	Cable diameter	mm	19 ±0.5	19 ± 0.5	20.5± 0.5	24 ±1	30 ± 1
10	Nominal cable weight	Kg/km	280	280	340	525	740
11	Cable to be designed to fiber strain value	%	0.1	0.1	0.1	0.1	0.1
12	Cable to be tested at defined load for fiber strain value of	%	0.25	0.25	0.25	0.25	0.25

Note: The manufacturer shall submit the design calculations which shall be cross checked.

LIST OF ABBREVIATIONS

ASTM	-	American Society for Testing and Materials
BIS	-	Bureau of Indian Standards
dB	-	decible
DTS	-	Department of Telecom Services
EIA	-	Electronic Industry Association
FOTP	-	Fibre Optic Test Procedure
FRP	-	Fibre Reinforced Plastic
Gpa	-	Gega Pascal
HDPE	-	High Density Polyethylene
IEC	-	International Electro -Technical Commission
IS	-	Indian Standards
ISO	-	International Standard Organisations
ITU-T	-	International Telecommunication Union – Transmission
KPSI	-	Kilogram per sq. inch
MFD	-	Mode Field Diameter
Nm	-	nanometer
N	-	Newton
OF	-	Optical Fibre
OTDR	-	Optical Time Domain Reflectometer
Ps/nm	-	pico second/ nano meter
Ps	-	pico second
QA	-	Quality Assurance
QM	-	Quality Manual
RMS	-	Route Mean Square
SMOF	-	Single Mode Optical Fibre
UV	-	Ultra Violet
µm	-	micrometer
°C	-	Degree Celsius

219

11kv UG CABLE LAYING DIAGRAM IN OPEN TRENCH METHOD

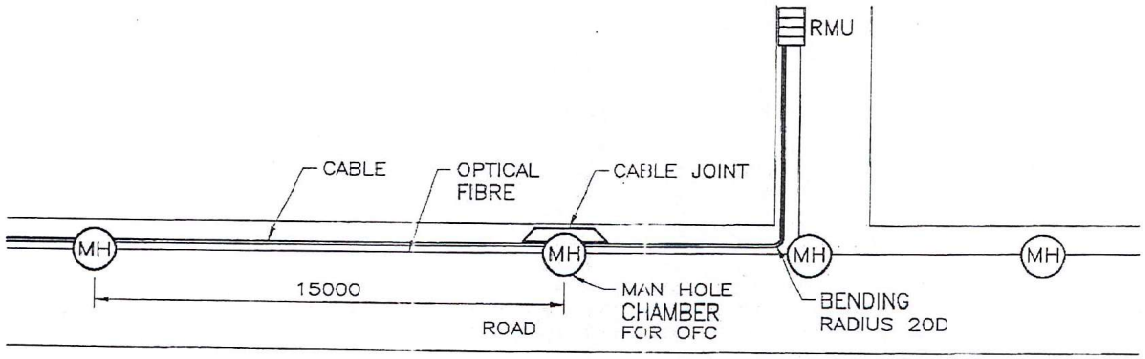

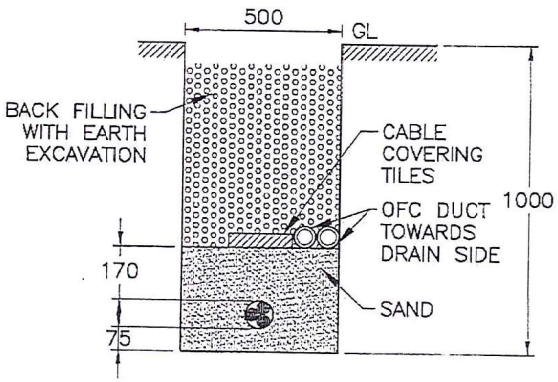

SINGLE CIRCUIT

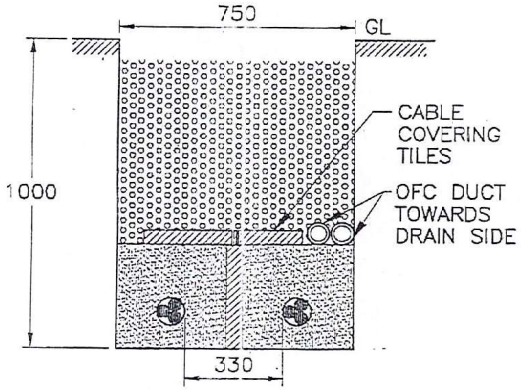

DOUBLE CIRCUIT

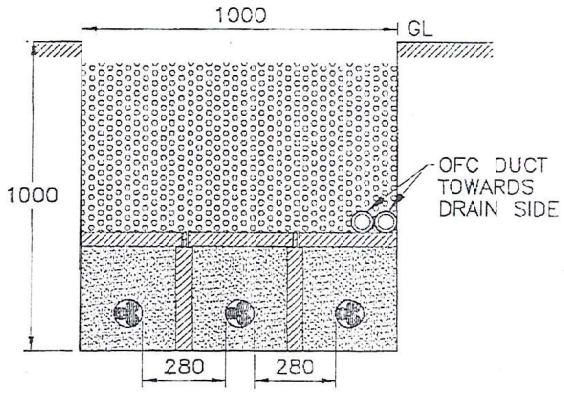

THREE CIRCUIT

NOTE:-

1. ALL DIMENSIONS ARE IN mm UNLESS OTHERWIRE STATED.
2. NO. OF DUCTS OF OFC AS PER THE REQUIREMENT OF NETWORK SERVICE PROVIDER.
3. REFERENCE STANDARD : IS 1255

ಉ.ಪ್ರ.ವ್ಯ. (ಪಿ)
ಗು.ಪ್ರ. ಮತ್ತು ಸು. ಬೆ.ವಿ.ಕಂ.

ಪ್ರ.ವ್ಯ. (ವಿ)
ಗು.ಪ್ರ. ಮತ್ತು ಸು. ಬೆ.ವಿ.ಕಂ
30/9/19

The General requirements of Optical Fibre is as follows (DETAILS HAS TO BE FURNISHED BY THE BIDDER)		
Optical Fibre Cable requirements checklist Table B.1 General Requirements		
1	**Fibre Type**	
2	**Number of Fibres**	
3	**Applications**	
a	Indoor	
b	Outdoor	
c	Category of fibre	
4	Wavelengths	
5	**Temperature range for**	
a	Storage	
b	Installation	
c	Use	
6	**Other Comments**	
Cable Construction		
1	**Fibre Protection**	
a	Loose Buffer	
b	Tight Buffer	
c	Slotted Core	
d	Other comments	
2	**Colour Coding**	
a	Cable Identification	
b	User's Name	
c	Manufacturer's Name	
d	Fibre Type	
e	Number of fibres	
f	Year of manufacture	
g	Length Marking	
4	**Metallic Conductors**	
a	Outer Protection/armouring	
b	Metallic or non-metallic construction	
c	Water – proof construction	
5	Other comments:	

"First number is not necessarily Zero"

B.2 Dimensional Requirements			
Category of fibre (e.g. IEC 793-1, clause 1.4 and IEC 793-2)			
Fibre Dimcnsional requirements (e.g. IEC 793-1, section 2)			
Parameter	**Requirement/ specification**	**Test method**	**Comments**
Diameter of core			
Diameter of cladding			
Core non – circularity			
Cladding non – circularity			
Core/cladding concentricity error			
Other parameters:			
Diameter of coating			
Diameter of buffer			
Coating non – circularity			
Length of cable and tolerance			
Diameter of electrical conductor			
Thickness of insulation			
Thickness of sheath			
Overall cable dimension			

"Only applies to multimode fibre. Concentricity of mode field diameter (with respect to the cladding) of single – mode fibre in table B.4b.

Table B.3- Mechanical Requirements

Parameter	Requirement/ specification	Test method	Comments
Tensile strength			
Crush resistance			
Impact resistance			
Isostatic Pressure			
Repeated Bending			
Torsion			
Flexing			
Snatch			
Kink			
Bend			
Other mechanical requirements			

Table B.4b – Transmission and optical requirements,
Single – mode fibre in cable

Parameter	Operating Wavelengths	Requirement/ specification	Test method	Comments
Attenuation				
Backscattering				
Mode field diameter(MFD)				
Concentricity of MFD				
Chromatic dispersion				
Cut – off wavelength				
Other requirements				

Table B.6- Environmental requirements

Parameter	Requirement/ specification	Test method	Comments
Tcmpcrature Cycling			
Performance under fibre conditions			
Sheath integrity			
Water Penetration			
Cold bend			
Freezing			
Nuclear radiation			
Other requiremcnts			